TRIDONIC

airASPECT SFI 30 IEQ A DA2

DALI-2 multi-sensor

Product description

- airASPECT – take your indoor air quality under control
- airASPECT represent new family of Tridonic environmental sensors to serve Indoor Environmental Quality applications
- New sensor brings cost effective temperature, humidity, Air Pressure, Air Quality Index and eCO2 measurements across the building
- Easy way to monitor air quality for the inhabitants
- Sensor is able to provide insights to the HVAC system and to optimize ventilation
- airASPECT data can be easily transferred to LMS via DALI part 306 and further to BMS or Cloud Dashboard via Rest API, MQTT or BACNET
- In combination with basicDIM Wireless module (passive or active) and Casambi IoT gateway air quality measurements can be done wirelessly, sensor data can be transferred via Casambi cloud to any cloud dashboard
- Supplied via DALI line
- 5 years guarantee (conditions at https://www.tridonic.com/en/int/services/manufacturer-guarantee-conditions)

Housing properties

- Casing: polycarbonate, black or white
- Type of protection IP20

Benefits

- Helps building owners to implement fixed sensor solution to monitor indoor air quality and gives to lighting OEMs possibility to create connected luminaries enabling this feature
- Perfect for refurbishment projects & leverage lighting infrastructure – use existing lighting (DALI, bDWireless) networks in the building and saving costs to building owners and maintenance companies
- Seamless integration with Tridonic controls portfolio thanks to Compatibility with existing mounting accessories for luminaire mounting and stand-alone installation on the ceiling
- Low power consumption 3.5mA
- Based on standards: DALI 2/DALI Part 306, Zhaga Book 20 compatible

Typical applications

- Offices, retail stores, other public buildings
- Stand-alone or lighting-fixture integrated installation (lighting fixture impact on sensor measurements to be considered)
- Products and systems for air quality sensing are able to contribute to indoor environmental quality
- Every solution that serves environmental quality scores additional points for Green Building certification today
- airASPECT can contribute to score points for Green Building certification

Website

http://www.tridonic.com/28005560

airASPECT SFI 30 IEQ A DA2

DALI-2 multi-sensor

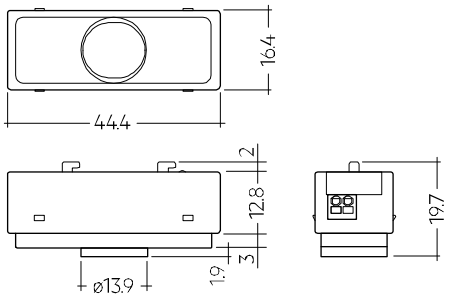

Ordering data

Type	Article number	Suitable for	Colour	Dimensions L x W x H	Packaging, carton	Weight per pc.
airASPECT SFI 30 IEQ A DA2 WH	**28005560**	Luminaire installation	White	44.4 x 16.4 x 19.7 mm	100 pc(s).	0.085 kg
airASPECT SFI 30 IEQ A DA2 BK	**28005561**	Luminaire installation	Black	44.4 x 16.4 x 19.7 mm	100 pc(s).	0.085 kg

Technical data

Sensor type	General purpose sensor DALI-2 62386-306
Supply via	DALI cable
Supply voltage ①	9.5 – 22.5 V
Current draw	≤ 3.5 mA
Starting time ②	3,600 s
Supported operating modes	0
Mounting hole diameter	14.1 mm
Air temperature sensor measuring range	-20 … +80 °C
Rel. humidity measuring range	0 … 100 %
Air pressure sensor measuring range	300 … 1,100 hPa
Air quality sensor index	0 … 500
eCO2 sensor measuring range	0 … 8,000 ppm
Ambient temperature ta	-20 … +60 °C
tc point	65 °C
Storage temperature ts	-20 … +70 °C
Housing material body	PC
Housing material lens	PE polyethylene
Housing colour body	White (similar to RAL 9010), Black (similar to RAL 9005)
Housing colour lens	White
Type of protection	IP20
Guarantee (conditions at www.tridonic.com)	5 Year(s)

Approval marks

RoHS

Standards

EN 61347-2-11, EN 55015, EN 61000-3-2, EN 61000-3-3, EN 61547, EN 62386-101, EN 62386-103, EN 62386-306

① Uin acc. IEC 62386-101.
② Starting time is the time until the sensor is ready and delivers correct values.

5DPI 14f Mounting Kit

Accessory

Product description
- Mounting frame for attaching all 5DP 14f sensor directly to the luminaire housing
- Optional shutter to prevent presence detection in a specific direction (for PIR sensors)
- Glow wire test with 750 °C according to EN 61347-1

Website
http://www.tridonic.com/28001558

Ordering data

Type	Article number	Packaging, carton	Weight per pc.
5DPI 14f mounting kit	**28001558**	100 pc(s).	0.004 kg
5DPI 14f mounting kit black	**28001575**	100 pc(s).	0.004 kg

ACU Sensor Housing 14rs IP20

Accessory

Product description
- Mounting frame for wired 5DP 14f sensors allowing direct mounting to the ceiling
- Easy „click in“ installation of the sensor
- IP20
- Casing: plastic, white
- UV stabilized plastic
- DALI MSensor 5DPI 14 is powered via DALI circuit, basicDIM DGC Sensor 5DPI 14f powered via control unit
- Optional shutter to reduce the detection area, which makes it possible to reduce the detection area from 360° to 240° (for PIR sensors)
- Mounting kit with screws and decorative plugs
- 0.5 mm² wiring for the sensor
- Two 3 x 1.5 mm² clamps with cable management (2 entry points on oppsite sides)
- Glow wire test with 750 °C according to EN 61347-1
- Sensor not included

Website
http://www.tridonic.com/28001872

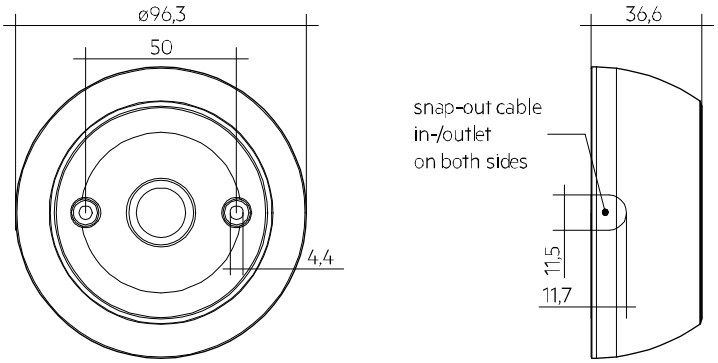

Ordering data

Type	Article number	Packaging, carton	Weight per pc.
ACU Sensor Housing 14rs IP20	**28001872**	81 pc(s).	0.054 kg

Housing base ACU 037 IP20 WH

Accessory

Product description

- Mounting base for wired 5/10/DPI/WDA sensors allowing direct mounting to the ceiling
- 2x mounting options for Tridonic standard control units-housing with mounting flaps (e.g. DALI PS3 or sceneCOM RTC) allowing vertical or horizontal fixation
- Vertical fixation possible using special fixation slots and horizontal fixation can be done using screw connection points in the bottom part of the accessory
- Housing provides IP 66, depending on the used Sensor and housing it can be less
- Casing: polycarbonate, white
- UV stabilized plastic
- Mounting kit with screws
- Casing passed glow wire test with 850 °C according to EN 61347-1
- compatile with: 28005943 Sensor Housing ACU 035 5DPI IP20 WH & 28005944 Sensor housing ACU 036 10DPI/WDA IP20 WH (not included in the scope of delivery)
- The dimensional drawing shows the final dimensions when mounted with 28005943 or 28005944
- System Solution: MSensor G3, basicDIM ILD G2/FSL, MSensor G3 SSM, basic DIM ILD G2 SSM, DALI PS3, airASECT, basicDIM IPS, basicDIM Wireless module G2, basicDIM Wireless passive module G2, sceneCOM S RTC
- Sensor not included

Website

http://www.tridonic.com/28005945

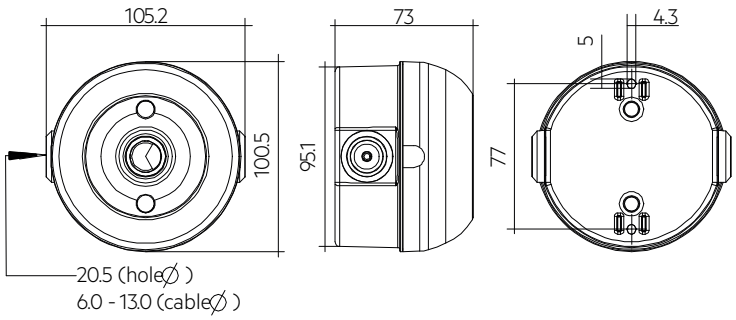

Ordering data

Type	Article number	Packaging, carton	Weight per pc.
Housing base ACU 037 IP20 WH	**28005945**	57 pc(s).	0.068 kg

Sensor Housing ACU 035 5DPI IP20

Accessory

Product description

- Mounting frame for wired 5DPI sensors allowing direct mounting to the ceiling
- Easy „click in“ installation of the sensor
- Additional bracket to fix sensor, to prevent its drop inside the housing
- IP20
- Casing: polycarbonate, white
- UV stabilized plastic
- Mounting kit with screws and decorative plugs
- 0.5 mm² wiring for the sensor
- Two 3 x 1.5 mm² clamps with cable management (2 entry points on oppsite sides)
- Optional shutter to reduce the detection area, which makes it possible to reduce the detection area from 360° to 240° (for PIR sensors)
- Casing passed glow wire test with 850 °C according to EN 61347-1
- compatible with Housing base ACU 037 IP20 WH Art.-No.: 28005945
- Sensor not included

Website
http://www.tridonic.com/28005943

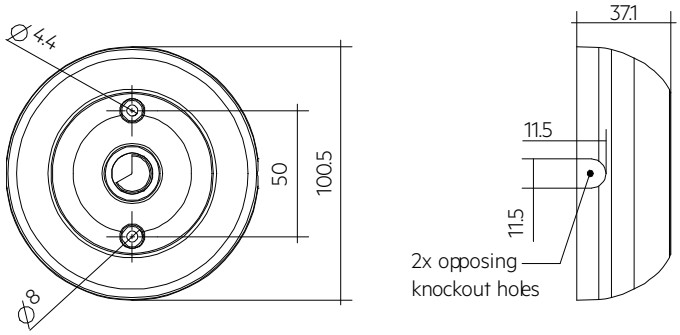

Ordering data

Type	Article number	Packaging, carton	Weight per pc.
Sensor Housing ACU 035 5DPI IP20 WH	**28005943**	57 pc(s).	0.052 kg

ACU BLIND COVER 60x22mm

Accessory

Interfaces

- Plastic mounting accessories in white and black color: BLIND COVER 60 x 22 mm and MOUNTING ADAPTER 60 x 22 mm
- Fit to 60 x 22 mm Zhaga Book 20 cut out
- The BLIND COVER has a holder for luminaire plug connector LEX-LP according to Zhaga Book 20 standard
- MOUNTING ADAPTER 60 x 22 mm establish possibility to install a shutter for preventing occupancy detection

Housing properties

- Casing: polycarbonate, black or white
- Type of protection IP20

Benefits

- Used for sensor integration to any lighting fixture which comply with Zhaga Book 20 standard
- Simple retrofitting thanks to the option of mounting the sensor in the luminaire from the outside
- No tools required for installation
- Possibility to remove BLIND COVER 60 x 22 mm and MOUNTING ADAPTER 60 x 22 mm without opening of the lighting fixture

Website

http://www.tridonic.com/28005056

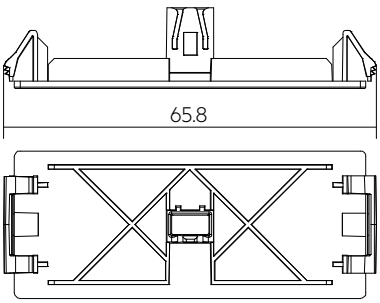

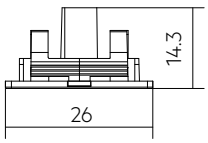

Ordering data

Type	Article number	Packaging, bag	Packaging, carton	Weight per pc.
ACU BLIND COVER 040 60x22 WH	**28005056**	10 pc(s).	100 pc(s).	0.004 kg
ACU BLIND COVER 040 60x22 BK	**28005057**	10 pc(s).	100 pc(s).	0.004 kg

ACU BLIND COVER 040 60x22 LED

Accessory

Interfaces

_ Plastic mounting accessories in white and black color: BLIND COVER 60 x 22 mm and MOUNTING ADAPTER 60 x 22 mm
_ Fit to 60 x 22 mm Zhaga Book 20 cut out
_ With hole for emergency light status LED (EM LED is not included and must be ordered separately - 28005763 & 28005769)
_ Special mounting bracket for EM LED fixation is included in the packaging
_ The BLIND COVER has a holder for luminaire plug connector LEX-LP according to Zhaga Book 20 standard
_ MOUNTING ADAPTER 60 x 22 mm establish possibility to install a shutter for preventing occupancy detection

Housing properties

_ Casing: polycarbonate, black or white
_ Type of protection IP20

Benefits

_ Used for sensor integration to any lighting fixture which comply with Zhaga Book 20 standard
_ Simple retrofitting thanks to the option of mounting the sensor in the luminaire from the outside (not possible for 28001538 smartSWITCH 5DP 14f there the lighting fixture must be opened)
_ No tools required for installation
_ Possibility to remove BLIND COVER 60 x 22 mm and MOUNTING ADAPTER 60 x 22 mm without opening of the lighting fixture

Website
http://www.tridonic.com/28005935

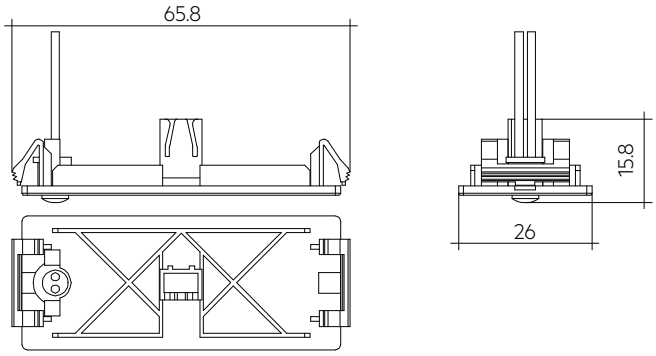

Ordering data

Type	Article number	Packaging, bag	Packaging, carton	Weight per pc.
ACU BLIND COVER 60x22 LED 1.3 WH	**28005935**	10 pc(s).	100 pc(s).	0.005 kg
ACU BLIND COVER 60x22 LED 1.3 BK	**28005936**	10 pc(s).	100 pc(s).	0.005 kg

ACU MOUNTING ADAPTER 040 60x22 CON

Accessory

Interfaces

_ Plastic mounting accessories in white and black color: BLIND COVER 60 x 22 mm and MOUNTING ADAPTER 60 x 22 mm
_ Fit to 60 x 22 mm Zhaga Book 20 cut out
_ The BLIND COVER has a holder for luminaire plug connector LEX-LP according to Zhaga Book 20 standard
_ MOUNTING ADAPTER 60 x 22 mm establish possibility to install a shutter for preventing occupancy detection

Housing properties

_ Casing: polycarbonate, black or white
_ Type of protection IP20

Benefits

_ Used for sensor integration to any lighting fixture which comply with Zhaga Book 20 standard
_ Simple retrofitting thanks to the option of mounting the sensor in the luminaire from the outside
_ No tools required for installation
_ Possibility to remove BLIND COVER 60 x 22 mm and MOUNTING ADAPTER 60 x 22 mm without opening of the lighting fixture

Website
http://www.tridonic.com/28005939

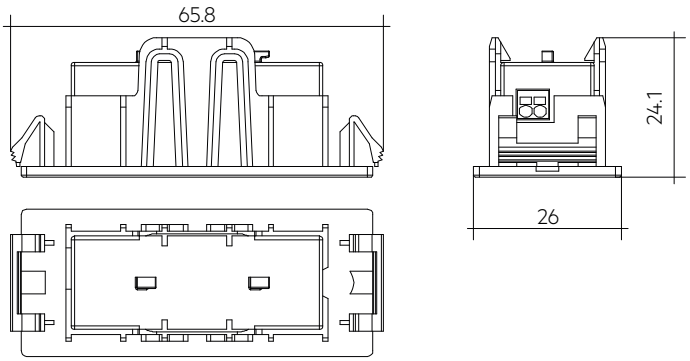

Ordering data

Type	Article number	Packaging, bag	Packaging, carton	Weight per pc.
ACU MOUNTING ADAPTER 60x22 CON 1.3 WH	28005939	10 pc(s).	100 pc(s).	0.006 kg
ACU MOUNTING ADAPTER 60x22 CON 1.3 BK	28005940	10 pc(s).	100 pc(s).	0.006 kg

ACU MOUNTING ADAPTER 040 60x22 CON LED

Accessory

Interfaces

_ Plastic mounting accessories in white and black color: BLIND COVER 60 x 22 mm and MOUNTING ADAPTER 60 x 22 mm
_ Fit to 60 x 22 mm Zhaga Book 20 cut out
_ With hole for emergency light status LED (EM LED is not included and must be ordered separately - 28005763 & 28005769)
_ Special mounting bracket for EM LED fixation is included in the packaging
_ The BLIND COVER has a holder for luminaire plug connector LEX-LP according to Zhaga Book 20 standard
_ MOUNTING ADAPTER 60 x 22 mm establish possibility to install a shutter for preventing occupancy detection

Housing properties

_ Casing: polycarbonate, black or white
_ Type of protection IP20

Benefits

_ Used for sensor integration to any lighting fixture which comply with Zhaga Book 20 standard
_ Simple retrofitting thanks to the option of mounting the sensor in the luminaire from the outside (not possible for 28001538 smartSWITCH 5DP 14f there the lighting fixture must be opened)
_ No tools required for installation
_ Possibility to remove BLIND COVER 60 x 22 mm and MOUNTING ADAPTER 60 x 22 mm without opening of the lighting fixture

Website
http://www.tridonic.com/28005941

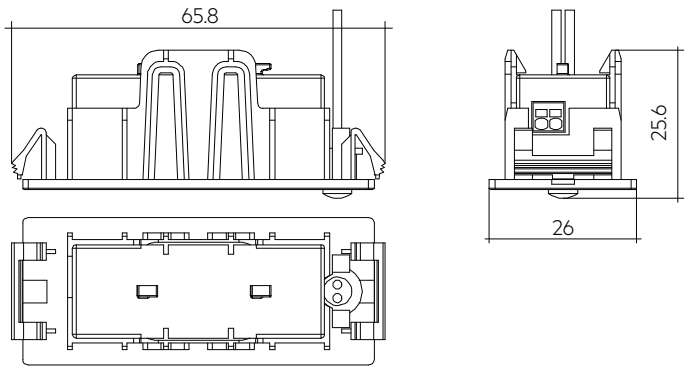

Ordering data

Type	Article number	Packaging, bag	Packaging, carton	Weight per pc.
ACU MOUNTING ADAP-R 60x22 CON LED 1.3 WH	**28005941**	10 pc(s).	100 pc(s).	0.006 kg
ACU MOUNTING ADAP-R 60x22 CON LED 1.3 BK	**28005942**	10 pc(s).	100 pc(s).	0.006 kg

1. Standards

EN 61347-1
EN 61347-2-11
EN 55015
EN 63000
EN 61547
EN 62386-101 Ed.2
EN 62386-103 Ed.1
EN 62386-306

1.1 DALI note

Sensor is only applicable for DALI-2 installations according to EN 62386-101 Ed.2.

Following table shows the instances and which values they provide.

DALI instances	
Instance number	**Explanation**
0	Temperature
1	Air humidity
2	Air pressure
3	Air quality
4	eCO2

1.2 Glow wire test

according to EN 61347-2-11 passed for temperatures up to 850°C.

2. Common

This device is one of the new generation of Tridonic sensors.
With this Sensor, you get a small sized sensor for Air Quality applications with a protection against environmental influence up to IP20.
This sensor provides measurement of:

- Temperature
- Air humidity
- Air pressure
- Air quality
- eCO2

This sensor is created for following main applications:
Low height buildings such as

- Corridors, passages und Garages
- Office buildings

3. Installation

- The device must not be connected to the mains. It is supplied directly via the DALI power supply.
- DALI is not SELV.
  The installation instructions for mains voltage therefore apply.
- The wiring should be a fixed installation in a dry and clean environment.
- Installation may only be carried out when the system is de-energized and by qualified personnel.
- National regulations for the installation of electrical systems must be observed.
- If the sensor is build in e.g. inside a housing together with other components who can emit heat, you need to consider a offset to the real ambient temperature and humidity.

3.1 Wiring

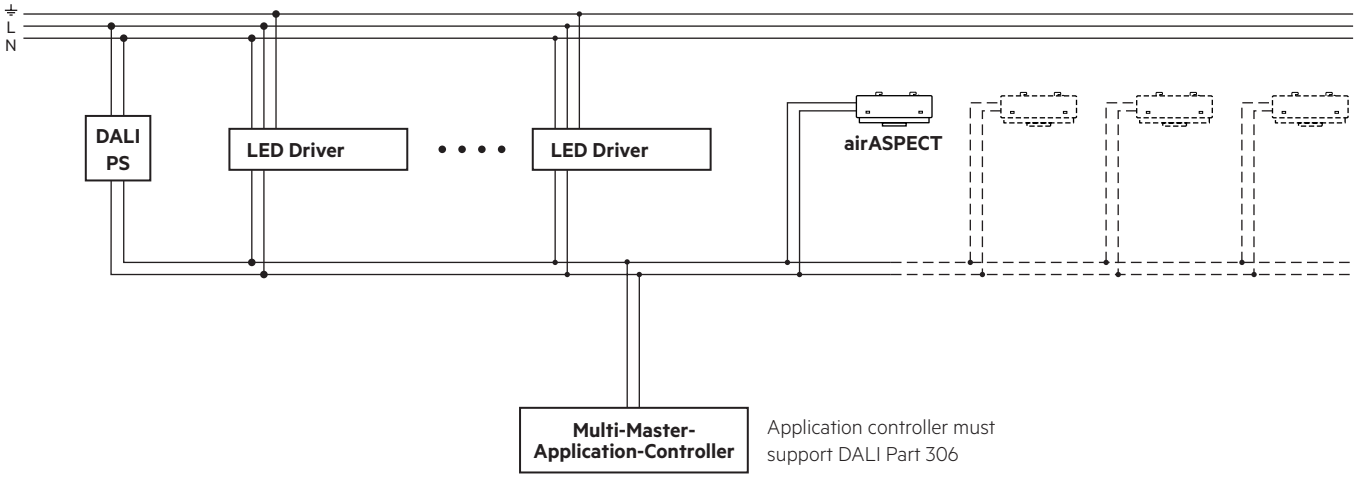

3.2 Wiring diagram with integrated DALI PS

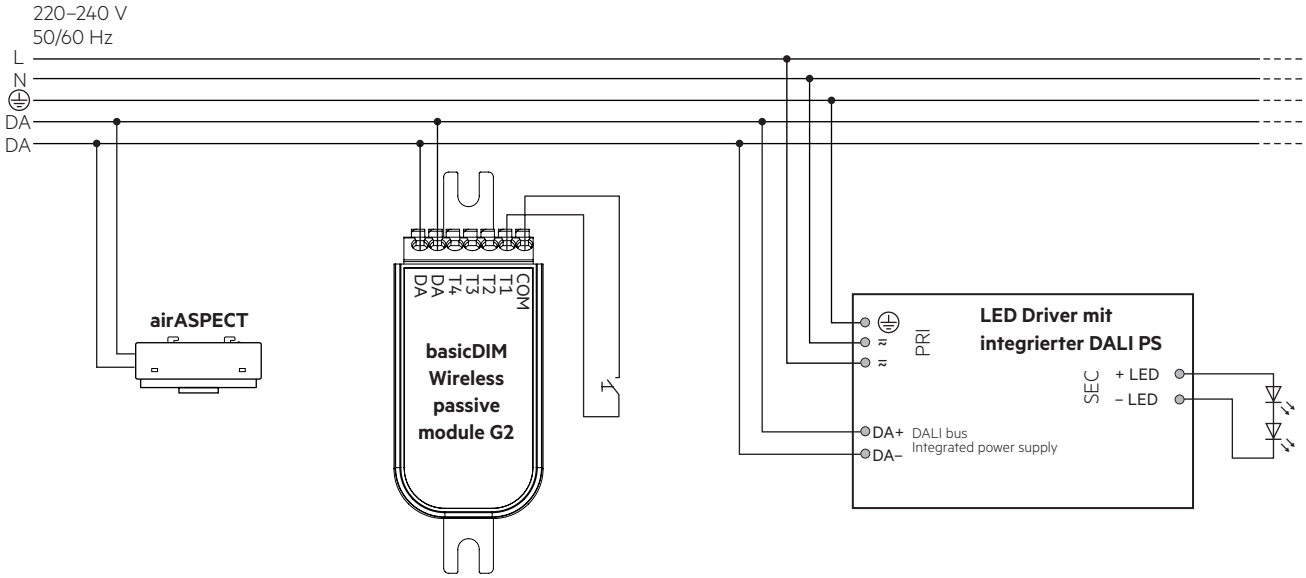

3.3 Wiring diagram with active bDW module

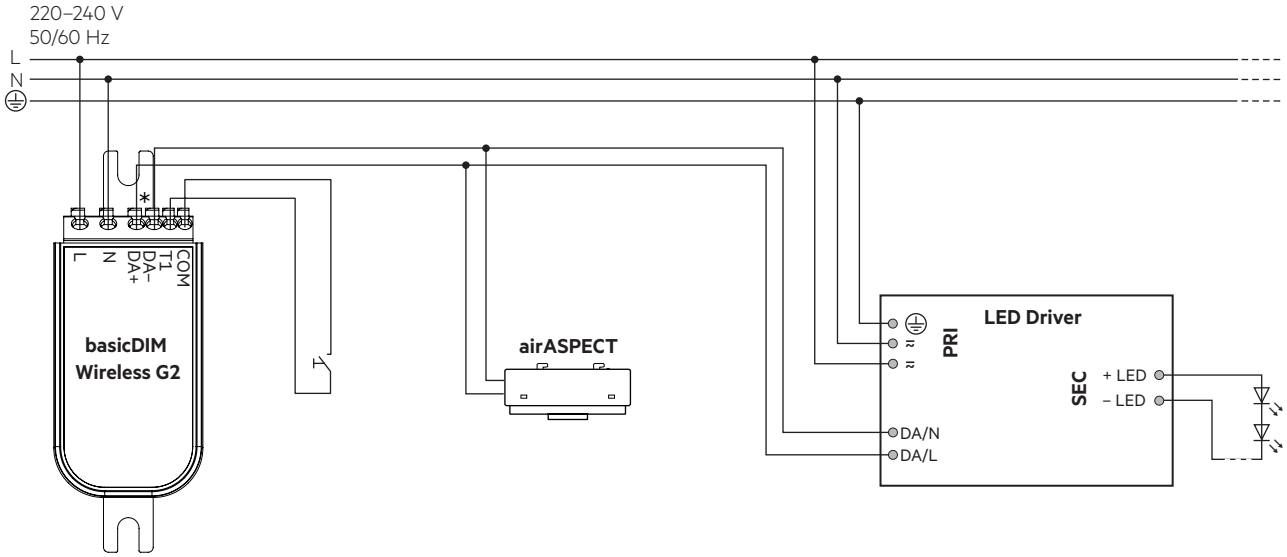

3.3 Wiring type and cross section

For wiring use solid wire from 0.14 to 0.5 mm².

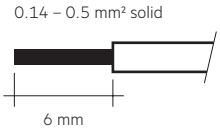

3.4 Mounting variants luminaire installation:

Variant 1:
Size of the sheet: 0.8 – 1.8 mm

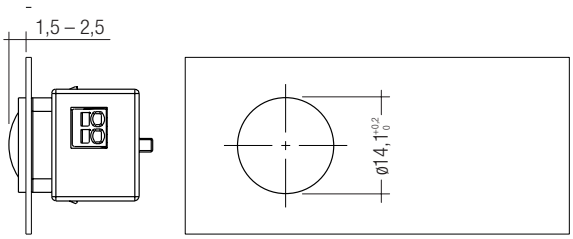

Variant 2:
Size of the sheet: 0.8 – 3.0 mm

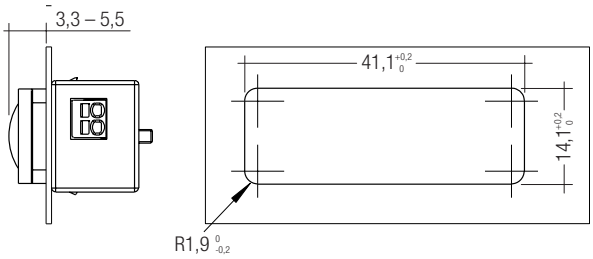

Variant 3:
Size of the sheet: 0.6 – 0.8 mm

Mounting on a touchable metal sheet on the rear side in protection class II luminaires is not permitted in variant 3. In order to allow this type of mounting, the sheet must be additionally insulated in a protection class II application or connected to a protective earth in a protection class I application.

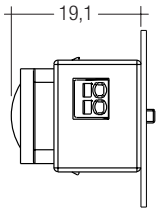

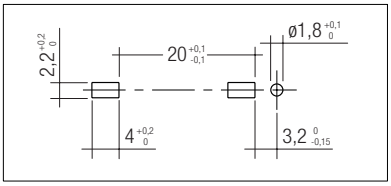

3.5 Mounting in luminaire housing with Mounting Kit:

Size of the sheet: 0.8 – 2.0 mm

Dimension drawing for needed mounting opening

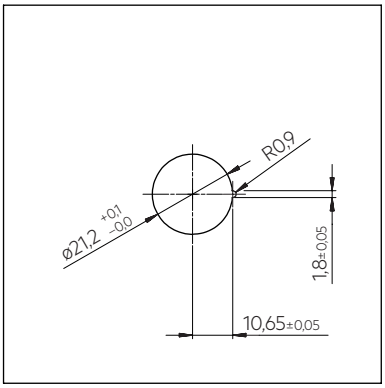

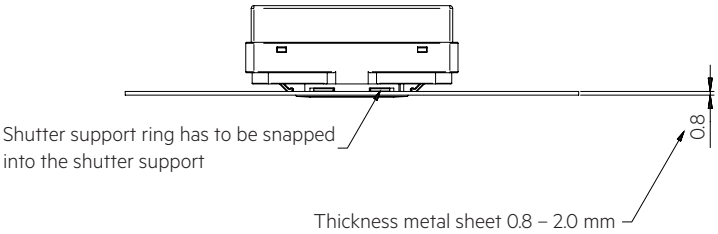

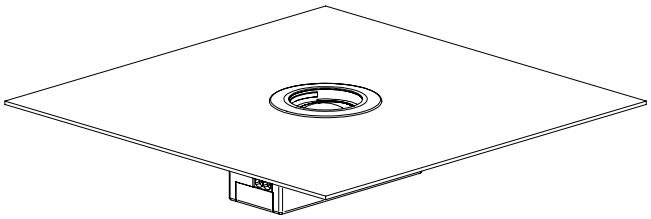

3.6 Mounting Kit mounting

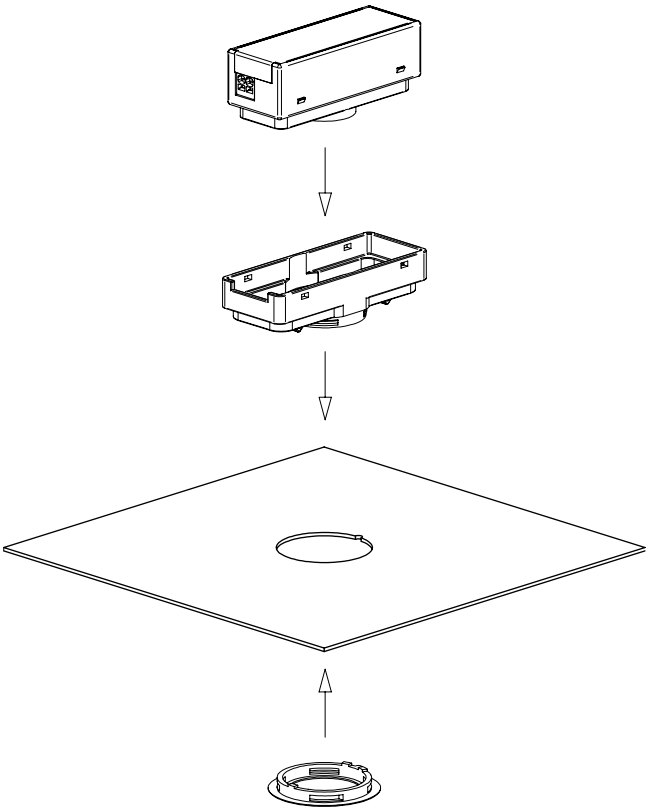

3.8 Wiring and mounting ACU Sensor Housing 14rs IP20

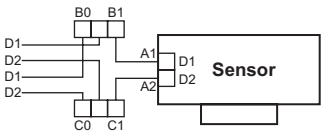

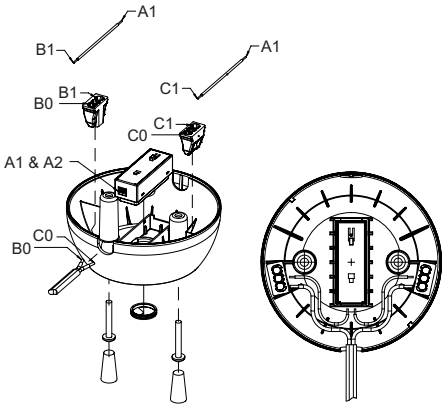

3.9 Mounting in class II luminaire

The Sensor provides basic insulation as required by IEC 62386-101 and defined in IEC 61347-1.
If the sensor is built in to a class II luminaire which has to provide double or reinforced insulation it has to be considered that the Sensor is not a class II device. Still the Sensor can be used for such projects as the front of the sensor is tested to fulfill the class II requirements for double or reinforced insulation.

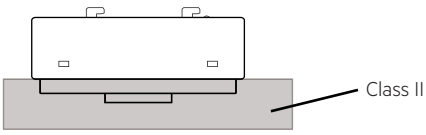

4. Positioning Guidelines

4.1 Guidelines for the placement of air temperature sensors in an office building

When measuring air temperature in an office building, the placement of your sensors is crucial for accurate readings. Here are some guidelines:

4.1.1 General considerations

- Representative locations:
  Place sensors in areas where people spend significant time such as common areas, workstations, and conference rooms.
- Avoid obstructions:
  Ensure sensors have unobstructed airflow. Avoid placing them near walls, furniture, or HVAC vents.
- Consistent conditions:
  Choose locations with minimal fluctuations in temperature, humidity, and air currents.

4.1.2 Specific recommendations

- Near ventilation systems:
  Position sensors near air intake and exhaust vents to monitor the effectiveness of heating and cooling systems.
- Away from heat sources:
  Avoid areas with direct heat sources such as radiators, heaters, windows, or sunlight.
- At breathing height:
  Place sensors at approximately 1.5 meters (5 feet) above the ground, which is the typical breathing height.
- Multiple locations:
  For a comprehensive assessment, consider installing sensors in different areas of the building and rooms to capture variations in temperature.

4.1.3 Additional factors

- Building layout:
  Consider the building's layout and airflow patterns when selecting sensor locations.
- Outdoor temperature:
  Monitor outdoor temperature to compare it with indoor conditions.
- Built-in sensor:
  If the sensor is installed in a luminaire, consider that the temperature inside the luminaire may differ from the ambient temperature and the sensor may not measure the exact ambient temperature due to the internal heating of the luminaire.

By following these guidelines, you can ensure that your temperature measurements accurately reflect the conditions in your office building and help identify areas for improvement.

4.2 Positioning guidelines for humidity sensor

When measuring relative humidity in an office building, the placement of your sensors is crucial for accurate readings.
In general, the positioning guidelines described for the air temperature sensor are also valid for humidity with some additions.

4.2.1 Specific recommendations

- Away from moisture sources:
  Avoid areas with known sources of moisture such as bathrooms, kitchens, or plants.

4.2.2 Additional factors

- Outdoor humidity:
  Monitor outdoor humidity to compare it with indoor conditions.

By following these guidelines, you can ensure that your humidity measurements accurately reflect the conditions in your office building and help identify areas for improvement.

4.3 Positioning guidelines for air quality, eCO_2 sensor

In general, the positioning guidelines described for the air temperature sensor are also valid with these additions.

4.3.1 General guidelines

- Ventilation-free areas:
  Avoid areas with strong draughts as these can distort the readings.
- Away from humidity:
  High humidity can also affect the sensors. Avoid bathrooms or kitchens.

4.3.2 Specific places

- Living room:
  A popular place as a lot of time is spent there.
- Bedroom:
  To monitor the air quality during sleep.
- Office:
  Particularly important if you spend a lot of time at your desk.
- Children's room:
  To ensure that the air quality is safe for children.
- Kitchen:
  To measure the effects of cooking fumes on air quality.

4.3.3 Why is placement so important

- Uneven distribution:
  CO_2 and other pollutants are not evenly distributed in a room.
- Local sources:
  Activities such as cooking, heating or the presence of plants can increase the CO_2 concentration in certain places.
- Ventilation:
  The position of the sensor in relation to doors and windows affects how quickly changes in air quality are detected.

4.3.4 Conclusion

The optimal placement of an eCO_2 sensor depends on various factors and can vary from room to room. By choosing the location carefully, you can ensure that you get accurate and meaningful readings.

4.4 Positioning guidelines for air pressure senor

Air pressure sensors are typically used to measure barometric pressure, which can be helpful in understanding weather patterns and air quality. While less common in office buildings compared to temperature, humidity, or CO_2 sensors, they can be valuable for specific applications like monitoring HVAC systems or studying the impact of weather on indoor conditions.

In general, the positioning guidelines described for the Air temperature sensor are also valid with these additions.

4.4.1 Specific recommendations

- Near weather stations:
  If possible, position sensors near an outdoor weather station for comparison and calibration.
- Away from air pressure sources:
  Avoid areas with known sources of pressure fluctuations such as air compressors or pneumatic systems.

4.4.2 Additional factors

- Outdoor pressure:
  Monitor outdoor pressure to compare it with indoor conditions.

By following these guidelines, you can ensure that your air pressure measurements accurately reflect the conditions in your office building and help identify any anomalies or trends that may be affecting indoor comfort or air quality.

5. Functional description

5.1 Instance 0: Air temperature

is an instance standardized by DALI 2 (62386 306), instance type 6.
All settings are implemented according to the standard.

The current air temperature (°C) is measured by the sensor and can be queried using a query or provided by the sensor using an event.
by the sensor.
The measuring range is -20 … +80 °C with a measuring accuracy of 0.1 °C.

Instance type	6
Value minimum	-20 °C
Value maximum	+80 °C
Resolution	0,1 °C
Resolution (Query) bit	11
Name - Quantity Nr.	26
Magnitude	126
Signal value signed	1
Measurement unit	9

5.2 Instance 1: relative air humidity

is an instance standardized by DALI 2 (62386 306), instance type 6.
All settings are implemented according to the standard.

The current relative humidity (%) is measured by the sensor and can be queried using a query or provided by the sensor using an event.
The measuring range is 0 … 100 %.

Instance type	6
Value minimum	0.00 %
Value maximum	100.00 %
Resolution	0,1 %
Resolution (Query) bit	10
Name - Quantity Nr.	29
Magnitude	126
Signal value signed	0
Measurement unit	50

5.3 Instance 2: Air pressure

is an instance standardized by DALI 2 (62386 306), instance type 6.
All settings are implemented according to the standard.

The current air pressure (hPa) is measured by the sensor and can be queried using a query or provided by the sensor using an event.
The measuring range is 300 … 1,100 hPa.

Instance type	6
Value minimum	300 hPa
Value maximum	1,100 hPa
Resolution	100 Pa
Resolution (Query) bit	11
Name - Quantity Nr.	31
Magnitude	129
Signal value signed	0
Measurement unit	16

5.4 Instance 3: Air quality

is an instance standardized by DALI 2 (62386 306), instance type 6.
All settings are implemented according to the standard.

The sensor measures the air quality based on the proportion of existing air pollutants. The air quality is displayed as an index, the value range is 0 … 500. The following table describes the relationship between the index and the air quality.

During operation the internal algorithm automatically calibrate and adapt themselves to the typical environments where the sensor is operated, e.g. home, workplace etc. This automatic background calibration ensures that the user experiences consistent Air quality performance. The calibration process considers the recent measurement history of up to four days, to ensure that air quality index 0-50 corresponds to „very good“ and 150-200 indicates slight contamination.

Index	Air quality	Colour
0 – 50	Very good	
51 – 100	Good	
101 – 150	Minor contaminated	
151 – 200	Slightly contaminated	
201 – 250	Severely contaminated	
251 – 350	Massively contaminated	
> 351	Extremely contaminated	

Chapter 5.6 describes the possible effects and measures for the measured value.
Below you find the sensitivity and the compound measured by the sensor element.

CO_2 equivalents (ppm)	Estimation of the CO_2 level in ppm. The sensor does not directly measure CO_2, but derives this from the average correlation between COCs and CO_2 in humans exhaled breath.
b-VOC equivalents (ppm)	Conversion into breath-VOC equivalents in ppm concentration. The scaling is derived from lab tests with the b-VOC gas mixture described in the next table.

Molar fraction	Compound	Production tolerance	Certified accuracy
5 ppm	Ethane	20 %	5 %
10 ppm	Isoprene / 2-methyl-1,3 Butadiene	20 %	5 %
10 ppm	Ethanol	20 %	5 %
50 ppm	Acetone	20 %	5 %
15 ppm	Carbon Monoxide	10 %	2 %

Instance type	6
Value minimum	0
Value maximum	500
Resolution	1
Resolution (Query) bit	9
Name - Quantity Nr.	46
Magnitude	127
Signal value signed	0
Measurement unit	1

5.5 Instance 4: eCO2 – CO2 equivalent

is an instance standardized by DALI 2 (62386 306), instance type 6.
All settings are implemented according to the standard.

The sensor measures the air quality based on the proportion of existing air pollutants.
The CO2 content can be determined from the measured value, CO2 equivalent (eCO2). The value range is 0 … 8,000 ppm.
The following table describes the relationship between the eCO2 value and the air quality.

eCO2	Air quality	Colour
0 – 350 ppm	Very good	
351 – 700 ppm	Good	
701 – 1,000 ppm	Minor contaminated	
1,001 – 1,500 ppm	Slightly contaminated	
1,501 – 2,500 ppm	Severely contaminated	
2,501 – 5,000 ppm	Massively contaminated	
5,001 – 8,000 ppm	Extremely contaminated	

Chapter 5.6 describes the possible effects and measures for the measured value.

Instance type	6
Value minimum	0 ppm
Value maximum	8,000 ppm
Resolution	1 ppm
Resolution (Query) bit	13
Name - Quantity Nr.	34
Magnitude	127
Signal value signed	0
Measurement unit	53

5.6 Air quality table

The following table shows the effects and possible measures for different air quality indices.

Index	eCO2	Impact (long-term exposure)	Proposed measures	Colour
0 – 50	0 – 350 ppm	clean air, best for feeling good	No measures necessary	
51 – 100	351 – 700 ppm	No irritation or impairment of well-being	No measures necessary	
101 – 150	701 – 1.000 ppm	Possible reduction in well-being	Ventilation recommended	
151 – 200	1.001 – 1.500 ppm	Stronger irritation possible	Increase ventilation with clean air	
201 – 250	1.501 – 2.500 ppm	Depending on the type of contamination, exposure can lead to effects such as headaches	Optimize ventilation	
251 – 350	2.501 – 5.000 ppm	More serious health problem possible if harmful substances are present	Reason for contamination should be identified if level is reached even without people present; maximize ventilation & reduce presence	
> 351	5.001 – 8.000 ppm	Headaches, additional neurotoxic effects possible	Contamination must be identified; avoid presence in the room and maximize ventilation	

6. Configuration

As mentioned in wiring chapter, this sensor can be used with any application controller who do support DALI Part 306.
In addition the compatibility of the sensor is also given with the Tridonic basicDIM Wireless system.
For more information please read the basicDIM Wireless instructions.

7. Miscellaneous

7.1 Disposal of equipment

Return old devices in accordance with the WEEE directive to suitable recycling facilities.

7.2 Additional information

Additional technical information at www.tridonic.com → Technical Data

Guarantee conditions at www.tridonic.com → Services

Lifetime declarations are informative and represent no warranty claim.
No warranty if device was opened.