TRIDONIC

EMcLED PRO 232A SR LiFePO4 50V Kit

PRO version

Product description

- Strain-relief kit with emergency LED driver, battery pack for 3 hours of operation, indication LED and indication LED holder
- Emergency lighting LED driver with DALI-2 interface and automatic test function
- For self-contained emergency lighting
- For LED modules with a forward voltage of 10 – 54 V
- SELV for output voltage < 60 V DC
- Low profile casing (21 x 30 mm cross-section)
- For luminaire installation
- Compatible with Tridonic's LLE FLEX modules (ADV, EXC)
- EM = Emergency
- Nominal lifetime up to 100,000 h
- 5 years guarantee (conditions at https://www.tridonic.com/en/int/services/manufacturer-guarantee-conditions)

Properties

- Non maintained operation
- 3 h rated duration
- Compatible with most constant current LED drivers (see data sheet, LED driver compatibility)
- 3-pole technology: 2-pole LED module changeover and delayed power switching for the LED driver
- Automatic shutdown of output if LED load is out of range
- Constant power output
- Two-colour status display LED
- Electronic charge system
- Deep discharge protection
- Short-circuit-proof battery connection
- Polarity reversal protection for battery provided by 3-pole connector
- Automatic detection of the connected battery technology (NiMH or LiFePO4 batteries)

Batteries

- High-temperature cells
- 18650 cells
- 4 – 8 years design life for LiFePO4 batteries
- LiFePO4: up to 12 years design life
- 5 years guarantee for LiFePO4 batteries (conditions at https://www.tridonic.com/en/int/services/manufacturer-guarantee-conditions)
- LiFePO4 batteries with Tridonic LiFeGuard

Website

http://www.tridonic.com/89801384

EMcLED PRO 232A SR LiFePO4 50V Kit

PRO version

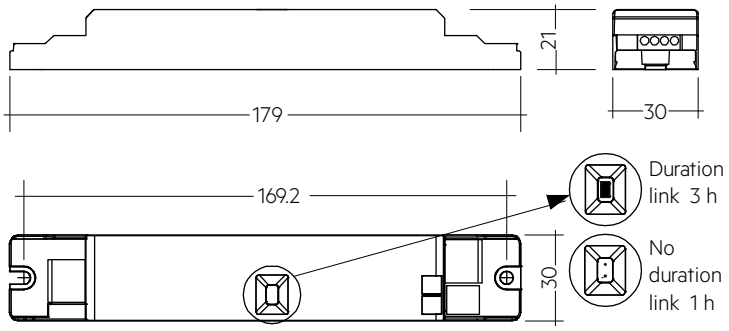

Ordering data

Type	Article number	Rated duration	Packaging, carton	Packaging, pallet	Weight per pc.	Dimensions L x W x H
EMcLED PRO 232A SR LiFePO4 50V KIT	**89801384**	3 h	1 pc(s).	155 pc(s).	0.415 kg	240 x 43 x 30 mm

Technical data

Rated supply voltage	220 – 240 V
AC voltage range	198 – 264 V
Mains frequency	50 / 60 Hz
Forward voltage range LED module	10 – 54 V
Output current	Refer to data sheet
Starting time	< 0.5 s from detection of emergency event
Overvoltage protection	320 V (for 48 h)
U-OUT (including open- / short-circuit and double load)	60 V
Max. open circuit voltage	60 V
Ambient temperature ta	-25 ... +55 °C
Max. casing temperature tc	80 °C
Mains voltage changeover threshold	According to EN 60598-2-22
Mains surge capability (between L - N)	1 kV
Mains surge capability (between L/N - PE)	2 kV
Type of protection	IP20
Rest mode max. number of emergency units	100
Rest mode max. wiring distance	1,000 m
Functional test	Weekly 5s test
Duration test	Yearly 1 h / 2 h / 3 h test
Lifetime	up to 100,000 h
Guarantee (conditions at www.tridonic.com)	5 Year(s)
Dimensions L x W x H	240 x 43 x 30 mm

Approval marks

DALI SELV EL-T 110 RoHS

Standards

EN 61347-1, EN 61347-2-13, EN 61347-2-7, EN 55015, EN 61000-3-2, EN 61000-3-3, EN 61547, EN 60068-2-64, EN 60068-2-29, EN 60068-2-30, EN 62384, EN 62386-202, according to EN 50172, according to EN 60598-2-22, acc. to EN 62034

Specific technical data

Type	Battery technology①	Rated duration	Typ. λ (at 230 V, 50 Hz)	Typ. output power P emergency	Mains current in charging operation			Mains power in charging operation		
					Initial charge	Fast recharg	Trickle charge	Initial charge	Fast recharg	Trickle charge
EMcLED PRO 232A SR LiFePO4 50V KIT	LiFePO4	3 h	0.65C	2.3 W	19 mA	19 mA	19 / 11 mA	2.8 W	2.8 W	2.8 / 1.4 W

① 12 h battery charging time for 2 h emergency lighting function when used with LiFePO4 batteries.

EMcLED Strain-relief set 240x43x30mm

Accessory

Product description

- Optional strain-relief for independent applications
- Transforms the LED driver into a fully class II compatible LED driver (e.g. ceiling installation)
- Easy and tool-free mounting to the LED driver, screwless cable-clamp channels with strain-relief (240 x 43 x 30 mm)

Website
http://www.tridonic.com/28003813

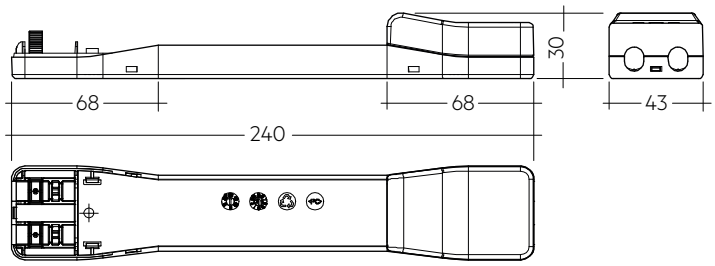

Permissible cable jacket diameter 2.2 – 9 mm

Ordering data

Type	Article number	Packaging, carton	Weight per pc.
EM cLED SR	**28003813**	10 pc(s).	0.08 kg

Approval marks

LiFePO4 Battery pack 3.0 – 7.5 Ah

Accessory

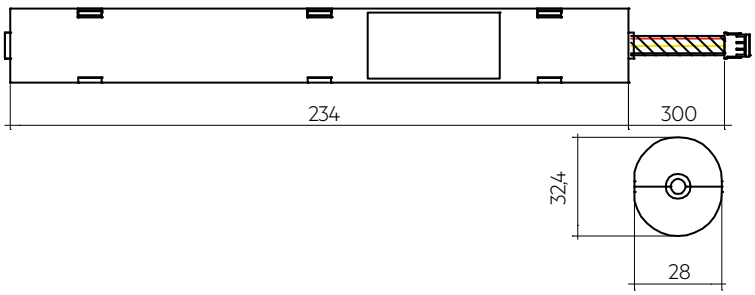

Product description

- High-temperature LiFePO4 cells only for use with Tridonic emergency lighting units
- 4 – 8 years design life for LiFePO4 batteries
- 5 years guarantee (conditions at https://www.tridonic.com/en/int/services/manufacturer-guarantee-conditions)

Properties

- Certified quality manufacturer
- Casing material made of polycarbonate
- Environmental friendly technology
- High energy density
- Electronic thermal battery management
- High energy maintenance of the charged battery
- Long shelf life
- Integrated electronics
- Safety features incorporated
- 1.0 mm² stranded wire
- Suitable for emergency lighting equipment as per IEC 60598-2-22

Website
http://www.tridonic.com/28005855

Ordering data

Type	Article number	Capacity	Packaging, carton	Packaging, outer box	Weight per pc.
PACK-LiFePO4 4.5Ah 3 CON	**28005855**	4.5 Ah	5 pc(s).	25 pc(s).	0.201 kg

Status indication bi-colour LED EM CON

Accessory

Product description
_ Two-colour status display LED
_ Green: system OK, red: fault
_ Plug connection

Website
http://www.tridonic.com/89800273

Ordering data

Type	Article number	Packaging, bag	Packaging, carton	Weight per pc.
LED EM bi-colour, 1.0 m CON	**89800273**	25 pc(s).	200 pc(s).	0.016 kg

ACD EM LED INDICATOR HOLDER

Accessory

Product description
_ Holder for indicator LED in emergency operation
_ Glow-wire test with a temperature of 850 °C passed

Website
http://www.tridonic.com/28002189

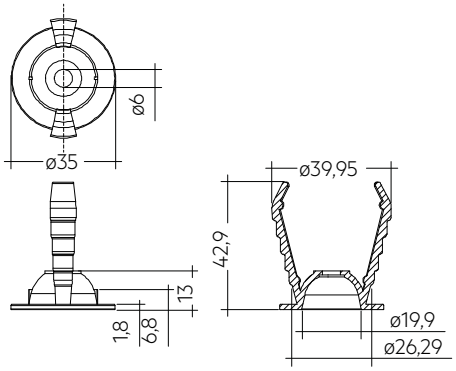

Ordering data

Type	Article number	Colour	Packaging, carton	Weight per pc.
ACD EM LED INDICATOR HOLDER	**28002189**	White	120 pc(s).	0.006 kg

1. Standards

- EN 61347-1
- EN 61347-2-13
- EN 61347-2-7
- EN 55015
- EN 61000-3-2
- EN 61000-3-3
- EN 61547
- EN 60068-2-64
- EN 60068-2-29
- EN 60068-2-30
- EN 62384
- DALI standard EN 62386-202
- according to EN 50172
- according to EN 60598-2-22
- according to EN 62034

Meaning of marking ◎
Double or reinforced insulation for built-in electronic LED drivers. The control gear relies upon the luminaire enclosure for protection against accidental contact with live parts.

1.1 Glow-wire test

according to EN 61347-1 with increased temperature of 850 °C passed.

1.2 Insulation and electric strength testing of luminaires

Electronic LED-Drivers can be damaged by high voltage. This has to be considered during the routine testing of the luminaires in production.

According to IEC 60598-1 Annex Q (informative only!) or ENEC 303-Annex A, each luminaire should be submitted to an insulation test with 500 VDC for 1 second. This test voltage should be connected between the interconnected phase and neutral terminals and the earth terminal. The insulation resistance must be at least 2 MΩ.

As an alternative, IEC 60598-1 Annex Q describes a test of the electrical strength with 1,500 VAC (or 1,414 x 1,500 VDC). To avoid damage to the electronic devices this test **must not be conducted**.

2. Thermal details and lifetime

2.1 Lifetime

Average lifetime 50,000 hours under rated conditions with a failure rate of less than 10 %. Average failure rate of 0.2 % per 1000 operating hours.

Expected lifetime with $LiFePO_4$ batteries

EMcLED PRO 232A SR	tc	65 °C	70 °C	75 °C	80 °C
LiFePO4 50V KIT	lifetime	> 100,000 h	> 100,000 h	> 100,000 h	> 78,000 h

The emergency lighting LED driver is designed for a lifetime stated above under reference conditions and with a failure probability of less than 10 %.

The relation of tc to ta temperature depends also on the luminaire design. If the measured tc temperature is approx. 5 K below tc max., ta temperature should be checked and eventually critical components (e.g. ELCAP) measured. Detailed information on request.

3. Installation / Wiring

3.1 Wiring diagrams

One or more LED modules with a total forward voltage of 10 to 54 V can be connected to the EM converterLED. These LED module(s), marked with “Emergency” are operated in emergency mode from the associated battery. In normal mains mode all LED modules are operated by the mains LED driver.

EM converterLED PRO with one LED module for non-maintained emergency operation

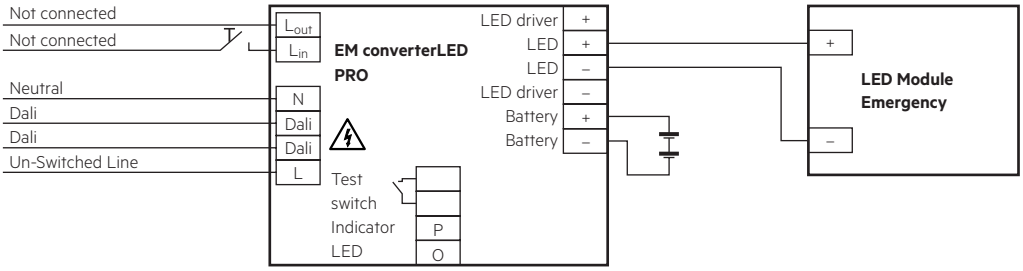

EM converterLED PRO with a standard LED LED driver and one LED module for mains and emergency operation

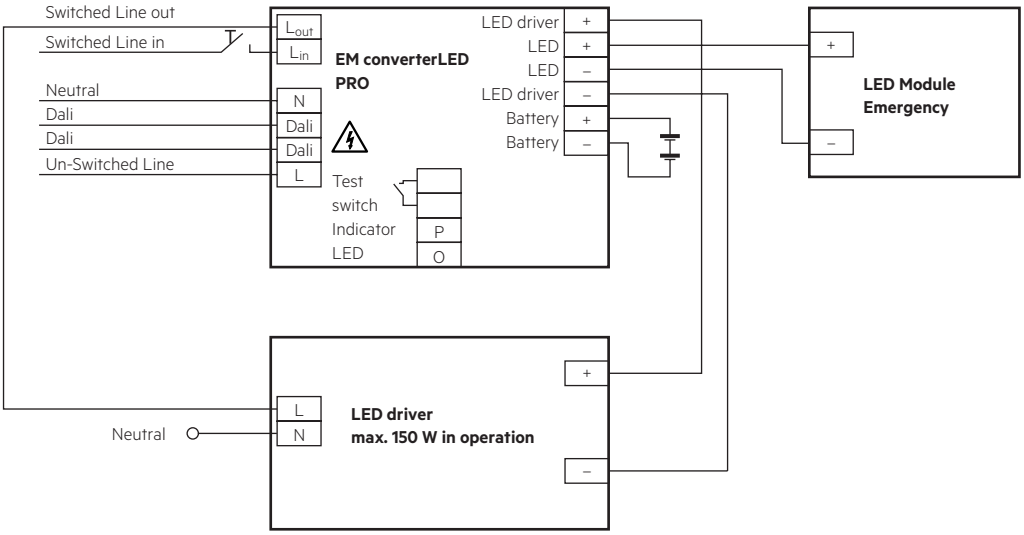

EM converterLED PRO with a standard LED LED driver and series operation of LED modules

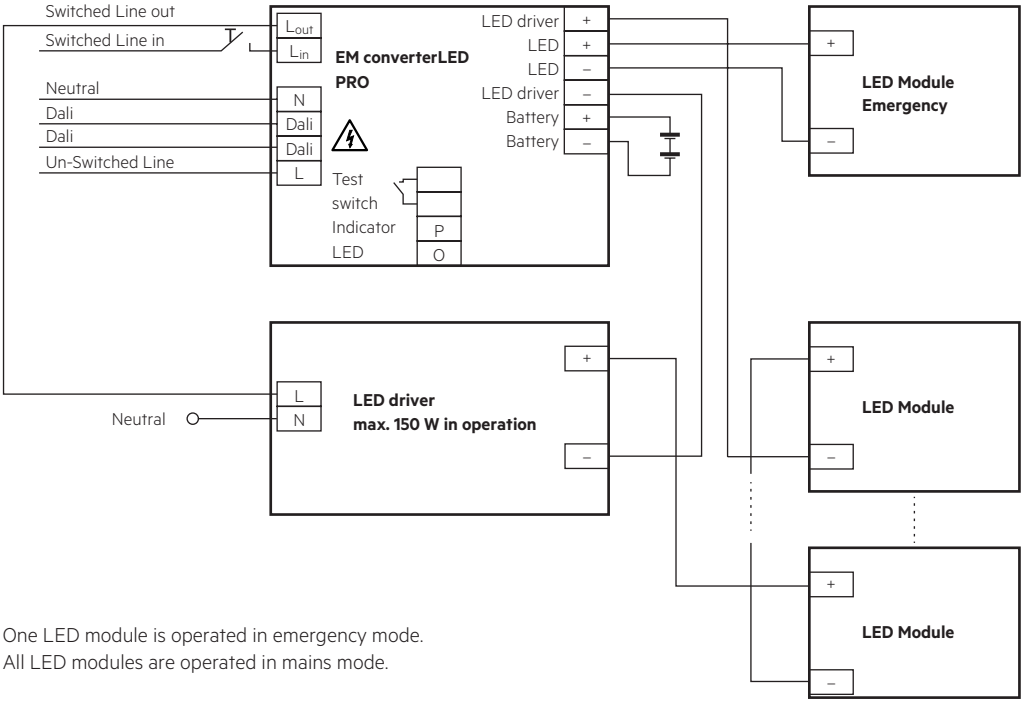

One LED module is operated in emergency mode.
All LED modules are operated in mains mode.

EM converterLED PRO with a standard LED LED driver and parallel operation of LED modules

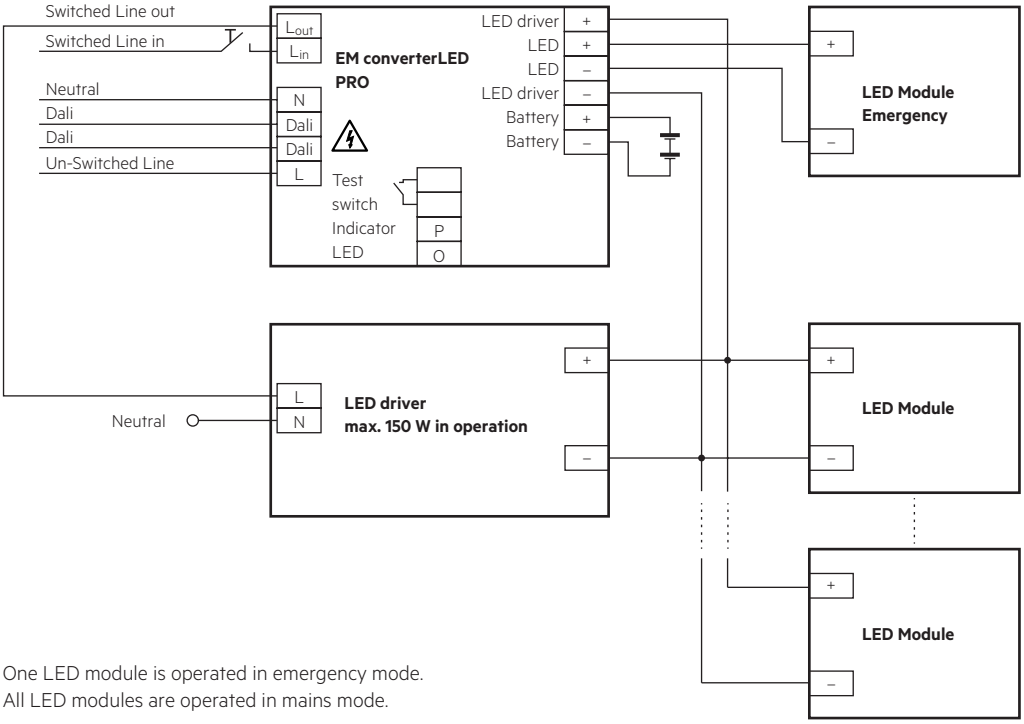

One LED module is operated in emergency mode.
All LED modules are operated in mains mode.

Wireless set-up for EM converterLED PRO with a standard LED driver and one LED module for mains and emergency operation

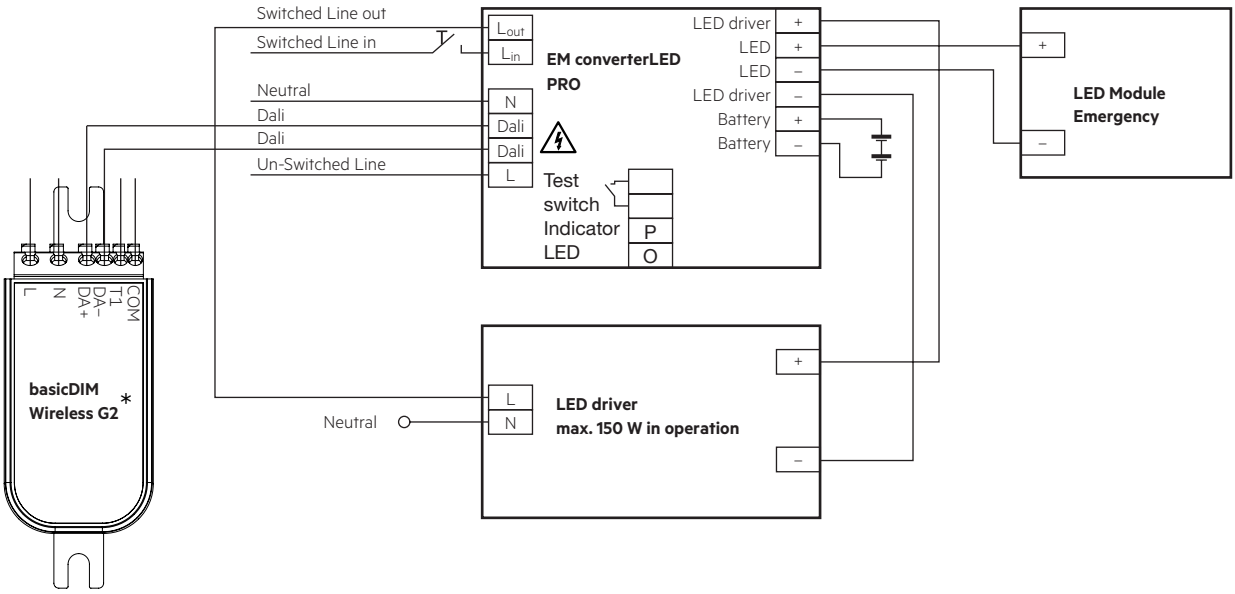

* For further information see basicDIM Wireless datasheet at www.tridonic.com

EM converterLED PRO with a DALI LED driver and one LED module for mains and emergency operation

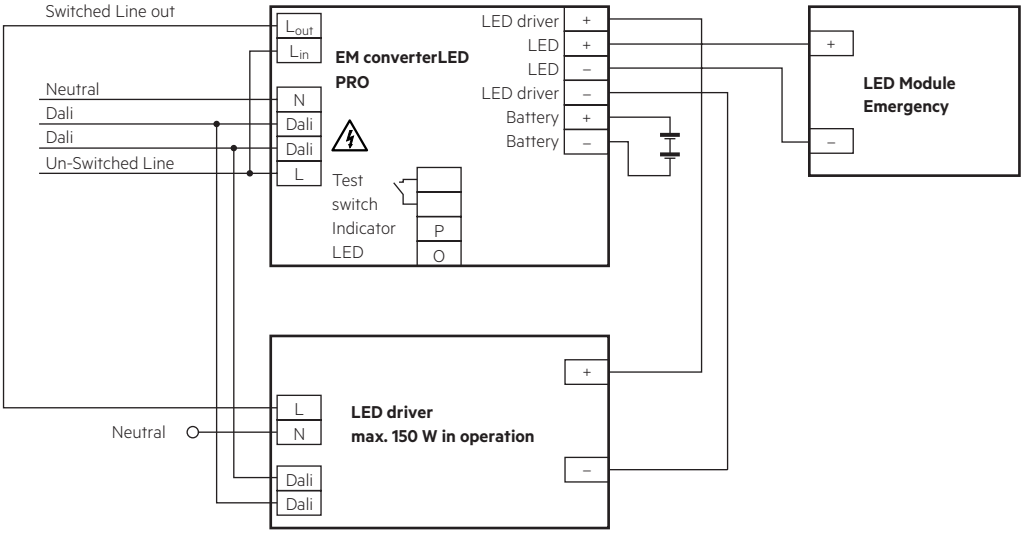

3.2 Wiring type and cross section

Solid wire with a cross section of 0.5 – 1.5 mm². Strip 8 – 9 mm of insulation from the cables to ensure perfect operation of terminals.

Wiring: LED module/LED driver/supply

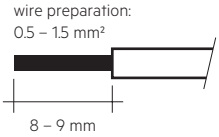

3.3 Battery connection

NiMH: Connection with extension

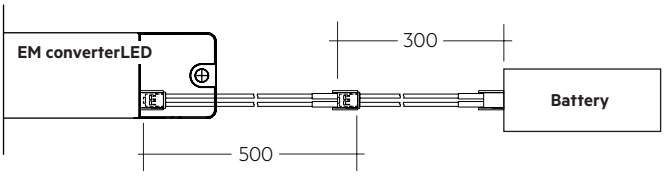

When using an EM converterLED in combination with a NiMH battery, order the CONNECTION CABLE NiMH 500mm separately.

LiFePO$_4$: Direct connection

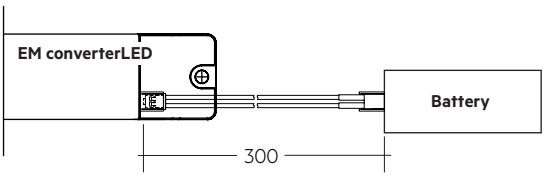

LiFePO$_4$: Connection with extension

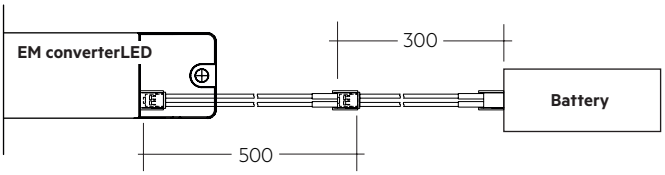

3.4 Loose wiring

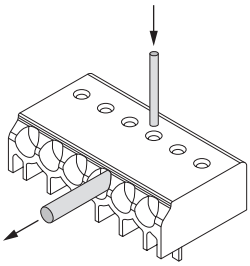

Loosen wire through twisting and pulling or using a Ø 1 mm release tool

3.5 Wiring guidelines

- The output to the LED is DC but has high frequency content, which should be considered for good EMC compliance.
- Separate LED leads from the mains and DALI connections and wiring for good EMC performance.
- Maximum lead length on the LED terminals is 3 m. For a good EMC performance keep the LED wiring as short as possible.
- Route the secondary wires (LED module) in parallel to ensure good EMC performance.
- Maximum lead length for the Test switch and Indicator LED connection is 1 m. Separate the test switch and Indicator LED wiring from the LED leads to prevent noise coupling.
- Battery leads are specified with 0.5 mm cross section and a length of 0.8 m
- DALI terminals are mains proof..
- Protect the wiring against short circuits to earth (sharp edged metal parts, metal cable clips, louver, etc.) to avoid the damage of the control gear.

To ensure that a luminaire containing LED emergency units complies with EN 55015 for radio frequency conducted interference in both normal and emergency mode it is essential to follow good practice in the wiring layout.

Within the luminaire route the switched and unswitched 50 Hz supply wiring as short as possible and keep it as far away as possible from the LED leads. Through wiring may affect the EMC performance of the luminaire.

Do not exceed the max. length of LED leads to the LED module. Note that the length of the EM converterLED leads to the LED module is added to the length of the leads from the LED driver to the EM converterLED module when considering the max. permitted lead length of the LED driver.

3.6 Maximum lead length

LED	3 m (6 m loop)[1]
Status indication LED	1 m
Batteries	0.8 m

[1] Note: The length of LED leads to the LED module must not be exceeded. Note that the length of the EM converterLED leads is added to the length of the leads from the LED driver to the EM converterLED module when considering max. permitted lead length of the LED driver. Leads should always be kept as short as possible.

3.7 Use of different phases

The use of different phases for switched line and unswitched line is allowed. When using different phases, the unswitched line must fail if the switched line fails. This is required to assure correct switching into emergency mode. It can be realised with a relay.

3.8 Compatibility with LLE FLEX modules

The EM converterLED can be used within certain restrictions to operate constant voltage LED loads from the Tridonic LLE FLEX (ADV, EXC) product range. A certain minimum length of the LLE FLEX is required for correct operation.
Detailed information in the download area of the ST and PRO product pages at www.tridonic.com (EM converterLED manual).

4. Mechanical values

4.1 Housing properties

- Casing manufactured from polycarbonate.
- Type of protection: IP20
- Max. torque at the mounting screws: 0.8 Nm

4.2 Mechanical data accessories

LED status indicator
• Bi-colour
• Mounting hole 6.5 mm diameter, 1 – 1.6 mm thickness
• Lead length 0.3 m / 1.0 m
• Insulation rating: 90 °C
• Plug connection

Test switch
• Mounting hole 7.0 mm diameter
• Lead length 0.55 m
• Plug connection

Battery connection
- Plug connection 0.3 m
- Extension 0.5 m

5. Electrical values

5.1 Maximum loading of automatic circuit breakers

Automatic circuit breaker type	B10	B13	B16	B20	C10	C13	C16	C20	Inrush current	
Installation Ø	1.5 mm²	1.5 mm²	1.5 mm²	2.5 mm²	1.5 mm²	1.5 mm²	1.5 mm²	2.5 mm²	I_{max}	time
EMcLED PRO 232A SR LiFePO4 50V KIT	90	130	130	130	180	260	260	260	10 A	120 µs

5.2 Insulation matrix

	Mains	**Switched Live**	**Battery, LED, Test switch, Indicator LED**	**DALI**	**LED driver**
Mains	–	•	• •	•	• •
Switched Live	•	–	• •	•	• •
Battery, LED, Test switch, Indicator LED	• •	• •	–	•	•
DALI	•	•	•	–	• •
LED driver	• •	• •	–	• •	–

• Represents basic insulation

• • Represents double or reinforced insulation

When using a non-SELV LED driver insulate the battery, LED, test switch and indicator LED in the luminaire according to the U-OUT rating of the LED driver.
DALI terminals are not SELV. Wire the terminals in accordance with the requirements of low voltage installations.

5.3 Typ. LED current/voltage characteristics

The LED current in emergency mode is automatically adjusted by the EM converterLED module based on the total forward voltage of the LED modules connected and the associated battery. The start of the LED in emergency mode does not result in a current peak.

EMcLED PRO 232A SR LiFePO4 50V KIT
Article number: 89801384
$LiFePO_4$ battery, 3.2 V battery voltage
830 – 890 mA battery discharge current (tolerance)

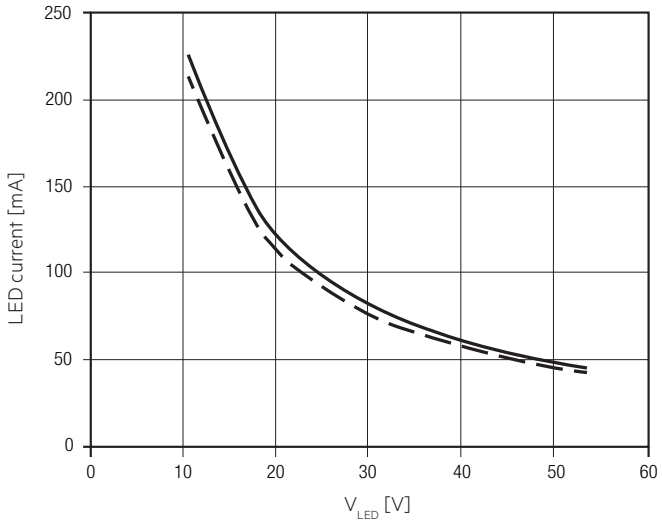

LED current at nominal battery voltage and min. battery discharge current

LED current at nominal battery voltage and max. battery discharge current

5.4 LED driver compatibility

The EM converterLED emergency unit use 3 pole technology and is compatible with most LED drivers on the market, however it is important to check that the rating of the LED driver does not exceed the values specified below:

- The max. allowed output current rating of the associated LED driver is 2 A eff (current rating of the terminals of EM converterLED) and 2.4 A peak (current rating of switching relays of EM converterLED)
- The max. allowed inrush current rating of the associated LED driver is 60 A peak for 1 ms or 84 A for 255 µs (inrush current rating of switching relay of EM converterLED)
- The max. allowed output voltage (U-OUT) of the associated LED driver applied to the EM converterLED output is 450 V (voltage withstand between adjacent contact of the single switching relay of the EM converterLED)
- The max. allowed LED load of the associated LED driver is 150 W in operation. The load must be an LED module.

Check compatibility with the carried out function test (duration at least 5 seconds) individually for each device.

6. Software / Programming / Interfaces

6.1 Software / programming

With appropriate software and interface different functions can be activated and various parameters can be configured in the LED driver. The Driver supports the following software and interfaces:

Software / hardware for configuration:
- companionSUITE (deviceGENERATOR, deviceCONFIGURATOR, deviceANALYSER)
- masterCONFIGURATOR

Interfaces for data transfer:
- Control input DALI

6.2 Control input DALI

The control input is non-polar for digital control signals (DALI). The control signal is not SELV. The control cable has to be installed in accordance to the requirements of low voltage installations.

Digital control with:
- DALI signal: 16 bit

7. Functions

⊙ companionSUITE:
DALI-USB
The companionSUITE with deviceGENERATOR, deviceCONFIGURATOR and deviceANALYSER is available via our WEB page:
https://www.tridonic.com/com/en/products/companionsuite.asp

◈ masterCONFIGURATOR:
DALI-USB
The masterCONFIGURATOR is available via our WEB page:
https://www.tridonic.com/com/en/software-masterconfigurator.asp

Icon	Function	DALI
	OEM Identification	⊙ ◈
	OEM GTIN	⊙ ◈
	Label information	⊙ ◈
	Factory reset	⊙ ◈
	Device operating mode	⊙ ◈
	Prolong time	⊙ ◈
	Autotest	⊙ ◈
	Test window	⊙ ◈

7.1 OEM Identification

The OEM (Original Equipment Manufacturer) can set his own identification number.

7.2 OEM GTIN

The Original Equipment Manufacturer (OEM) can set his own Global Trade Item Number (GTIN).

7.3 Label information

In production, an individual label can be printed out for each device.
For this there are different default values (Batch No., Production Date, ...) available.
In addition, you can use these two text input fields to insert your own luminaire information and print it out.

- Article number (48 characters)
- Description (6 x 48 characters)

This information is not stored on the device, it is only used for the label print function in the deviceCONFIGURATOR.

7.4 Prolong time

Prolong time can be set by the DALI controller.
Here you can set how long the emergency operation will be maintained after power recovery.
The module exits the PROLONG mode as soon as the cut-off threshold of the battery voltage has been reached (total discharge protection), that is when the total operating time has been exceeded.
The default prolong time is set as 0 minutes as specified within the DALI standard.
Indicator LED will stay off for the duration of the prolong time.

7.5 Autotest

7.5.1 Functional test

The time of day and frequency of the 5 seconds function test can be set by the DALI controller. The default setting is a 5 seconds test on a weekly basis.

7.5.2 Duration test

The time of day and frequency of the duration test can be set by the DALI controller. The default setting is a duration test conducted every 52 weeks.

For 2 h operation:
The first commissioning duration test has a time of 120 minutes, subsequent through life tests are conducted for 90 minutes. When the battery is changed or disconnected and re-connected the unit will next conduct a 120 minute test.

7.6 Test window

The test window sets the maximum time between the scheduled start time or test request via DALI and the actual execution of the test.
If the test cannot be executed in the test window, the TEST EXECUTION TIMEOUT bit in the FAILURE STATUS is set.

7.7 Status indication

System status is indicated by a bi-colour LED and by a DALI status flag.

LED indication	Status	Comment
Permanent green	System OK	AC mode
Fast flashing green (0,1 sec on – 0,1 sec off)	Function test underway	
Slow flashing green (1 sec on – 1 sec off)	Duration test underway	
Red LED on	Load failure	Open circuit / Short circuit / LED failure
Slow flashing red (1 sec on – 1 sec off)	Battery failure	Battery failed the duration test or function test / Battery is defect or deep discharged/ Incorrect battery voltage / battery outside operating temp
Fast flashing red (0,1 sec on – 0,1 sec off)	Charging failure	Incorrect charging current
Double pulsing green	Inhibit mode	Switching into inhibit mode via controller
Binary transmission of address via green/red LED	Address identification	During address identification mode
Green and red off	DC mode	Battery operation (emergency mode)

7.8 Testing

DALI Control
A DALI command from a suitable control unit can be used to initiate function and duration tests at individually selected times. Status flags are set for report back and data logging of results.

When a DALI bus has not been connected or when a DALI bus is connected but the DALI default DELAY and INTERVAL times have not been re-set by sending appropriate DALI commands, then the EM converterLED PRO will conduct self-tests in accordance with the default times set within the EEPROM.
These default times are factory pre-set, in accordance with the DALI standard EN 62386-202, to conduct an automatic function test every 7 days and a duration test every 52 weeks. Since the DELAY time is factory pre-set to Zero, all units are tested at the same time. Test times can be changed with a command over the DALI bus.

The DELAY and INTERVAL time values must be re-set when the emergency system test times are to be scheduled by a DALI control and monitoring system.
Note that once the default values have been set to Zero, tests will only be conducted following a command from the control system. If the DALI bus is disconnected the EM converterLED PRO does not revert to self-testing mode.

Note: If the battery is connected the DALI communication is only possible after power reset.

Addressing
The EM converterLED PRO includes the EZ easy addressing system which allows addressing and identification by using the bi-colour LED in conjunction with the EM PRO addressing tool. Binary address codes given by the LED can be simply converted to the DALI addresses 0 to 63. For single handed addressing using this method it is necessary to send a broadcast ident command every 3 to 9 seconds. During this command the LEDs will be switched off and the indication LED will flash the 6 bit binary address preceded by a 3 second start indication period.

Commissioning
After installation of the luminaire and initial connection of the mains and battery supply to the EM converterLED PRO the device starts with the 20 hours initial charge followed by a 4 hours trickle charge for NiCd/NiMH batteries or with a 24 hours initial charge for LiFePO4 batteries.
Afterwards the device conducts a commissioning test for the full duration. The 20 hours recharge for NiCd/NiMH batteries or 24 hours recharge for LiFePO4 batteries occurs also with the connection of a new battery. The following automatic commissioning duration test only takes place when a battery is replaced and fully charged and the interval time is not set to zero. In case the interval time is set to zero the device expects the DALI system to request the testing.

Rest Mode / Inhibit Mode
Emergency operation is automatically started when the mains supply is switched off. If the Rest Mode is activated, the discharging of the battery will be minimized by switching off the LED output. If the Inhibit Mode has been activated before the mains supply is switched off, Rest Mode will be automatically switched on if the mains supply is switched off within 15 minutes.
Rest Mode and Inhibit Mode can be initiated by the DALI controller. The REST command has to be sent after the mains supply has been disconnected and whilst the EM converterLED PRO is in emergency operation.
The INHIBIT command has to be sent while the EM converterLED PRO is supplied by mains.
After a mains reset the EM converterLED PRO exits the Rest Mode. Rest Mode and Inhibit Mode can both be disabled by sending the RE-LIGHT/ RESET INHIBIT command. Rest Mode / Inhibit Mode are not supported from EM converterLED in case of combination with a 1-cell LiFePO4 battery and 2-cell NiMH battery.

Test switch
An optional test switch can be wired to each EM converterLED.
This can be used to to:
- Initiate a 5 seconds function test: press 200 ms < T < 1 s
- Execute function test as long as switch pressed: press > 1 s
- Reset selftest timer (adjust local timing): press > 10 s

Timer reset functionality
The timer for function and duration test can be set to a particular time of the day by either pressing the test switch for longer than 10 seconds or cycling the unswitched line supply 5 times within 1 minute. The timer adjustment will enable the test start time to be defined manually at time in day when the timer was reset. It will also disable the adaptive test algorithm thereby forcing the unit to perform the test at the same time rather than it being defined by the adaptive algorithm. This function will only work provided the interval time is greater than zero (automatic test mode enabled). The factory programmed delay offset (1 – 28 days) will be loaded after the reset into the delay timer for the function and duration test in order to randomize the tests between adjacent units.

BlackBox data recording
Parameters providing information about the application and use are stored in the EM converterLED PRO. The parameters stored provide information on the mains, battery, LED output and emergency operation.
The BlackBox can be read out with the masterCONFIGURATOR and deviceANALYSER.

DALI Controller
DALI controllers and hardware/software solutions are available from Tridonic. Please refer to the Lighting controls section.

8. Battery data

8.1 Battery selection

			EMcLED PRO, 3 h		
				Type	**EMcLED PRO 232A SR LiFePO4 50V KIT**
				Article no.	**89801384**
				Duration	**3 h**
Technology and capacity	Design	Number of cells	**Type**	**Article no.**	**Assignable batteries**
$LiFePO_4$ 1.5 Ah 18650 cells	Remote Box	1 x 3	**PACK-LiFePO4 4.5Ah 3 CON**	**28005855**	•

Note: Only use Tridonic 18650 LiFePO4 batteries of the correct cell configuration.

8.2 Battery charge / discharge data

EMcLED PRO, 3 h

	Type	**EMcLED PRO 232A SR LiFePO4 50V KIT**
	Article no.	**89801384**
	Duration	**3 h**
Battery charge time	Initial charge	24 h
	Fast recharge	24 h
	Trickle charge	continuously and battery voltage controlled
Charging current	Initial charge	250 – 290 mA
	Fast recharge	250 – 290 mA
	Trickle charge[1]	250 – 290 mA / 0 mA
Discharge current		830 – 890 mA
Charge voltage range[2]		2.0 – 3.65 V
Discharge voltage range		3.65 – 2.60 V

[1] Automatic recharge when battery voltage falls below 3.4 V. Charger off (0 mA) when battery voltage exceeds 3.6 V.

Note: Battery protected against operation at excessive temperatures (charging stopped when battery cell temperature < 0 °C or > 60 °C).

The emergency lighting LED driver will recharge the battery normally after running the test of 61347-2-7 CL 22.3 (abnormal operating conditions).

[2] The battery will not be charged below 2.0 V.

8.3 Accupack-LiFePO4

Capacity 1.5 Ah

International designation	lFpR 19/66
Battery voltage/cell	3.2 V
Cell type	18650
Case temperature range to ensure	
4 years design life	+5 °C to +45 °C
6 years design life	+5 °C to +35 °C
8 years design life	+5 °C to +25 °C
Max. short term battery case temperature	
(shorter than 1 month over the battery lifetime)	70 °C
Max. number discharge cycles	50 cycles total
Max. storage time	15 months at -20 °C to +35 °C

Only use Tridonic batteries.

Comply with UN 38.3 and IEC 62133 (safety testing) protected against over charge, over discharge, charging at excessive temperatures, short-circuit and over current.

8.4 Safety

Note: LiFeGuard ensures safe and reliable battery operation by offering a comprehensive three-layered safety system.
It addresses the cell, battery pack and emergency driver.

8.4.1 Deep discharge protection

When the battery remains connected without charging for a long period of time after the battery cut off of the driver the battery voltage can still drop. To make sure the cells are not damaged by this voltage drop, the battery protection prevents the battery from further discharge below 2.0 V.

8.4.2 Overcharge protection

If in case of an error or the use of a wrong driver the battery gets overcharged the battery protection will disconnect the battery from the driver at a voltage of 3.9 V. A discharge of the battery is still possible after the protection circuit was triggered to guarantee emergency operation.

8.4.3 Short-circuit protection

In case of a short circuit the battery protection opens the connection to the driver and the output is therefore free of voltage. The output will be reactivated again when the short circuit is removed.

8.4.4 Overtemperature protection

The battery is protected against temporary thermal overheating. If the temperature limit is exceeded the further charging of the battery is no longer possible. The temperature protection is activated below approx. 0 °C and above approx. +60 °C. The discharging of the battery is still possible to guarantee emergency operation. The charging is automatically activated when the temperature is within the range of 0 to 60°C again.

Battery has built in thermal sensor for safe charging. Mount battery away from heat source.
Positioning of the thermal sensor see battery data sheet.

8.5 Storage, installation and commissioning

Relevant information about storage conditions, installation and commissioning are provided in the battery datasheets.

Activating NiMH batteries:
In order to activate new batteries, 2-3 full charge-discharge cycles could be needed. This activating process is defined by charging (24 h) and discharging (1/2/3 h) of the batteries. If the first duration test fails, please repeat the test after a 24 hour charging period.

9. Miscellaneous

9.1 Maximum number of switching cycles

EM converterLEDs are tested with 50,000 mains switching cycles of the associated LED driver.

9.2 Battery replacement

After a battery replacement and a subsequent full charge cycle (24 h) a duration test is mandatory to prove that with the new battery the rated duration is achieved.

9.3 FELV control terminals

FELV control terminals marked „Risk of electric shock“ are not safe to touch. Insulate circuits connected to any FELV control terminal for the Low Voltage supply voltage of the control gear. Protect terminals connected to the FELV circuit against accidental contact.

9.4 BlackBox data recording

Several parameters in respect to the application and use of the product are stored in the EM converterLED. The parameters provide information about the mains, battery, LED output and emergency operation.
The BlackBox can be read out with the masterCONFIGURATOR and deviceANALYSER.

In order to allow a safe detection of a battery replacement through the “Black Box data recording” follow the below described process.

Battery replacement
1. Disconnect mains
2. Disconnect battery
3. Reconnect and disconnect mains while no battery is not connected[1]
4. Connect new battery
5. Connect mains[2]

[1] Battery fault is safely recorded by the EM converterLED
[2] Connection of new battery is recorded by the EM converterLED

9.5 Mains-connected transformers

The EM converterLED does not contain mains-connected windings of transformers.

9.6 Additional information

Additional technical information at www.tridonic.com → Technical Data

Lifetime declarations are informative and represent no warranty claim.
No warranty if device was opened.