TRIDONIC

EMcLED BASIC 232A SR LiFePO4 50V Kit

BASIC version

Product description

- Strain-relief kit with emergency LED driver, battery pack for 3 hours of operation, indication LED and indication LED holder
- Self contained emergency lighting LED driver for manual testing
- For LED modules with a forward voltage of 10 – 54 V
- SELV for output voltage < 60 V DC
- Low profile casing (21 x 30 mm cross-section)
- For luminaire installation
- Compatible with Tridonic's LLE FLEX modules (ADV, EXC)
- Nominal lifetime up to 100,000 h
- EM = Emergency
- 5 years guarantee (conditions at https://www.tridonic.com/en/int/services/manufacturer-guarantee-conditions)

Properties

- Non maintained operation
- 3 h rated duration
- Compatible with all dimmable and non-dimmable constant current LED driver (see data sheet, LED driver compatibility)
- 3-pole technology: 2-pole LED module changeover and delayed power switching for the LED driver
- Automatic shutdown of output if LED load is out of range
- Constant power output
- Maximum light output for all LED modules
- Electronic charge system
- Deep discharge protection
- Short-circuit-proof battery connection
- Polarity reversal protection for battery provided by 3-pole connector

Batteries

- High-temperature cells
- LiFePO4 batteries
- 18650 cells
- LiFePO4: 4 – 8 years design life
- 5 years guarantee for LiFePO4 batteries (conditions at https://www.tridonic.com/en/int/services/manufacturer-guarantee-conditions)
- LiFePO4 batteries with Tridonic LiFeGuard

Website

http://www.tridonic.com/89801382

EMcLED BASIC 232A SR LiFePO4 50V Kit

BASIC version

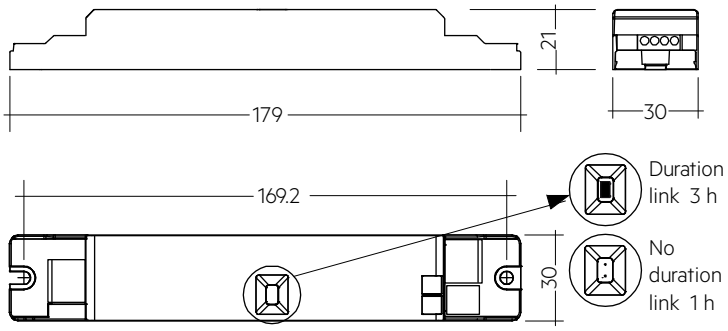

Ordering data

Type	Article number	Rated duration	Packaging, carton	Packaging, pallet	Weight per pc.	Dimensions L x W x H
EMcLED BASIC 232A SR LiFePO4 50V KIT	**89801382**	3 h	1 pc(s).	155 pc(s).	0.415 kg	240 x 43 x 30 mm

Technical data

Rated supply voltage	220 – 240 V
AC voltage range	198 – 264 V
Mains frequency	50 / 60 Hz
Forward voltage range LED module	10 – 54 V
Output current	Refer to data sheet
Starting time	< 0.5 s from detection of emergency event
Overvoltage protection	320 V (for 48 h)
U-OUT (including open- / short-circuit and double load)	60 V
Max. open circuit voltage	60 V
Battery charging time ①②	24 h
Ambient temperature ta	-5 … +55 °C
Max. casing temperature tc	75 °C
Mains voltage changeover threshold	According to EN 60598-2-22
Mains surge capability (between L - N)	1 kV
Mains surge capability (between L/N - PE)	2 kV
Type of protection	IP20
Lifetime	up to 100,000 h
Guarantee (conditions at www.tridonic.com)	5 Year(s)
Dimensions L x W x H	240 x 43 x 30 mm

Approval marks

SELV EL RoHS

Standards

according to EN 50172, according to EN 60598-2-22, EN 61347-1, EN 61347-2-13, EN 61347-2-7, EN 55015, EN 61000-3-2, EN 61000-3-3, EN 61547, EN 60068-2-64, EN 60068-2-29, EN 60068-2-30, EN 62384

Specific technical data

Type	Battery technology	Rated duration	Typ. λ (at 230 V, 50 Hz)	Typ. output power P emergency	Mains current in charging operation			Mains power in charging operation		
					Initial charge	Fast recharge	Trickle charge	Initial charge	Fast recharge	Trickle charge
EMcLED BASIC 232A SR LiFePO4 50V KIT	LiFePO4	3 h	0.6C	2.3 W	20 mA	20 mA	20 / 12 mA	2.9 W	2.9 W	2.9 / 1.4 W

① 16 h battery charging time for 2 h emergency lighting function according to AS 2293.
② 12 h battery charging time for 2 h emergency lighting function when used with LiFePO4 batteries.

EMcLED Strain-relief set 240x43x30mm

Accessory

Product description

- Optional strain-relief for independent applications
- Transforms the LED driver into a fully class II compatible LED driver (e.g. ceiling installation)
- Easy and tool-free mounting to the LED driver, screwless cable-clamp channels with strain-relief (240 x 43 x 30 mm)

Website
http://www.tridonic.com/28003813

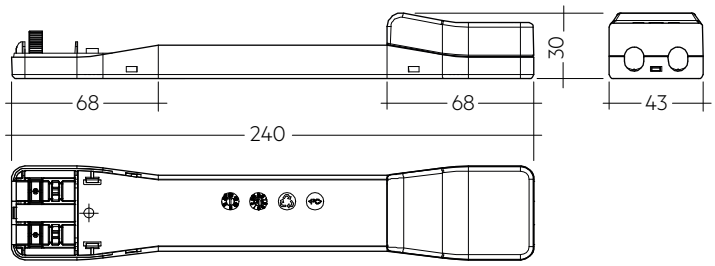

Permissible cable jacket diameter 2.2 – 9 mm

Ordering data

Type	Article number	Packaging, carton	Weight per pc.
EM cLED SR	**28003813**	10 pc(s).	0.08 kg

Approval marks

LiFePO4 Battery pack 3.0 – 7.5 Ah

Accessory

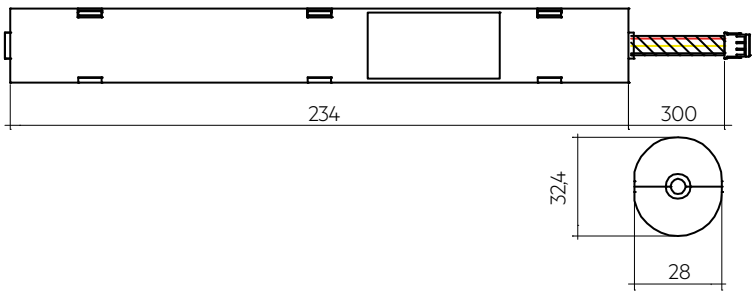

Product description

- High-temperature LiFePO4 cells only for use with Tridonic emergency lighting units
- 4 – 8 years design life for LiFePO4 batteries
- 5 years guarantee (conditions at https://www.tridonic.com/en/int/services/manufacturer-guarantee-conditions)

Properties

- Certified quality manufacturer
- Casing material made of polycarbonate
- Environmental friendly technology
- High energy density
- Electronic thermal battery management
- High energy maintenance of the charged battery
- Long shelf life
- Integrated electronics
- Safety features incorporated
- 1.0 mm² stranded wire
- Suitable for emergency lighting equipment as per IEC 60598-2-22

Website
http://www.tridonic.com/28005855

Ordering data

Type	Article number	Capacity	Packaging, carton	Packaging, outer box	Weight per pc.
PACK-LiFePO4 4.5Ah 3 CON	**28005855**	4.5 Ah	5 pc(s).	25 pc(s).	0.201 kg

Status indication green LED EM CON

Accessory

Product description
_ A green LED indicates that charging current is flowing into the battery
_ 0.3 / 1.0 m cable length
_ Plug connection

Website
http://www.tridonic.com/89800269

Ordering data

Type	Article number	Packaging, bag	Packaging, carton	Weight per pc.
LED EM green, 1.0 m CON	**89800269**	25 pc(s).	800 pc(s).	0.018 kg

ACD EM LED INDICATOR HOLDER

Accessory

Product description
_ Holder for indicator LED in emergency operation
_ Glow-wire test with a temperature of 850 °C passed

Website
http://www.tridonic.com/28002189

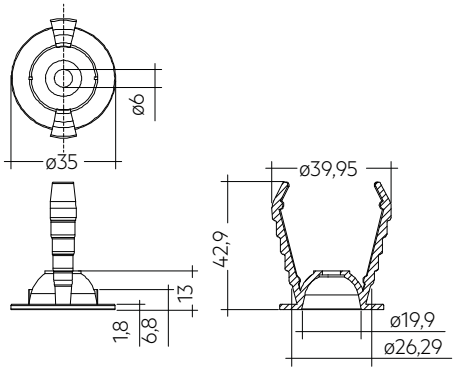

Ordering data

Type	Article number	Colour	Packaging, carton	Weight per pc.
ACD EM LED INDICATOR HOLDER	**28002189**	White	120 pc(s).	0.006 kg

1. Standards

- EN 61347-1
- EN 61347-2-13
- EN 61347-2-7
- EN 55015
- EN 61000-3-2
- EN 61000-3-3
- EN 61547
- EN 60068-2-64
- EN 60068-2-29
- EN 60068-2-30
- EN 62384
- according to EN 50172
- according to EN 60598-2-22

Meaning of marking ◎
Double or reinforced insulation for built-in electronic LED drivers. The control gear relies upon the luminaire enclosure for protection against accidental contact with live parts.

1.1 Glow-wire test

according to EN 61347-1 with increased temperature of 850 °C passed.

1.2 Insulation and electric strength testing of luminaires

Electronic LED-drivers can be damaged by high voltage. This has to be considered during the routine testing of the luminaires in production.

According to IEC 60598-1 Annex Q (informative only!) or ENEC 303-Annex A, each luminaire should be submitted to an insulation test with 500 VDC for 1 second. This test voltage should be connected between the interconnected phase and neutral terminals and the earth terminal. The insulation resistance must be at least 2 MΩ.

As an alternative, IEC 60598-1 Annex Q describes a test of the electrical strength with 1,500 VAC (or 1,414 x 1,500 VDC). To avoid damage to the electronic devices this test **must not be conducted**.

2. Thermal details and lifetime

2.1 Lifetime

Average lifetime 50,000 hours under rated conditions with a failure rate of less than 10 %. Average failure rate of 0.2 % per 1000 operating hours.

Expected lifetime with $LiFePO_4$ batteries

EMcLED BASIC 232A SR LiFePO4 50V KIT	tc	65 °C	70 °C	75 °C
	lifetime	> 100,000 h	> 100,000 h	97,000 h

The emergency lighting LED driver is designed for a lifetime stated above under reference conditions and with a failure probability of less than 10 %.

The relation of tc to ta temperature depends also on the luminaire design. If the measured tc temperature is approx. 5 K below tc max., ta temperature should be checked and eventually critical components (e.g. ELCAP) measured. Detailed information on request.

3. Installation / Wiring

3.1 Wiring diagram

One or more LED modules with a total forward voltage of 10 to 54 V can be connected to the EM converterLED 50V module. These LED module(s), marked with “Emergency” are operated in emergency mode from the associated battery. In normal mains mode all LED modules are operated by the LED driver from the mains supply.

Use of the test switch:
For checking the device function press the test switch for a minimum of 3 seconds.

EM converterLED BASIC with one LED module for non-maintained emergency operation

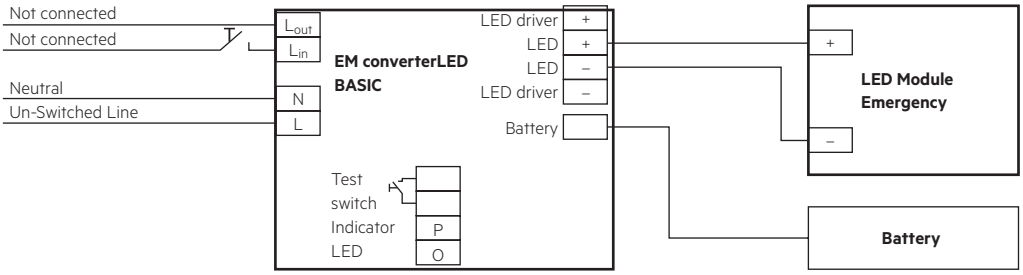

EM converterLED BASIC with a standard LED driver and one LED module for mains and emergency operation

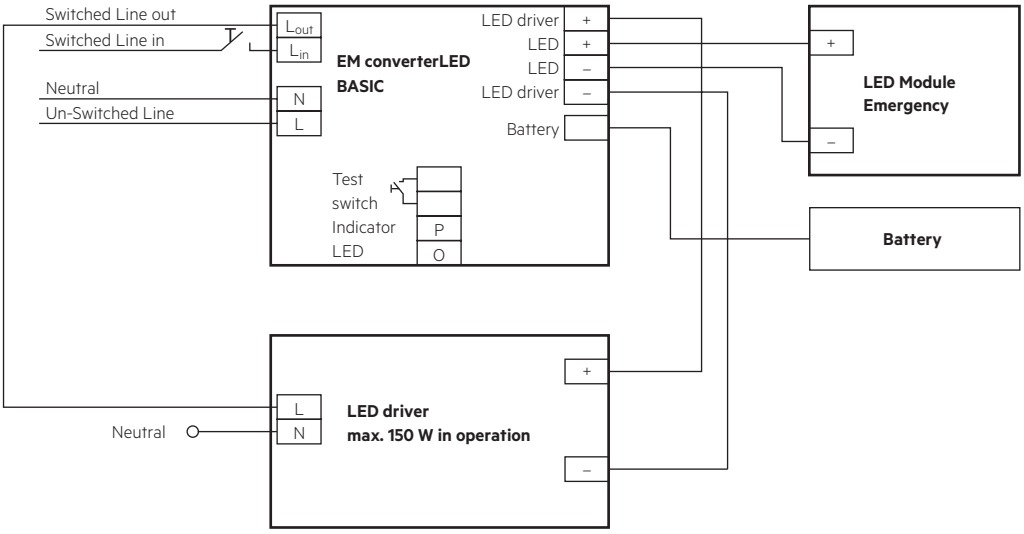

EM converterLED BASIC with a standard LED driver and <u>series</u> operation of LED modules

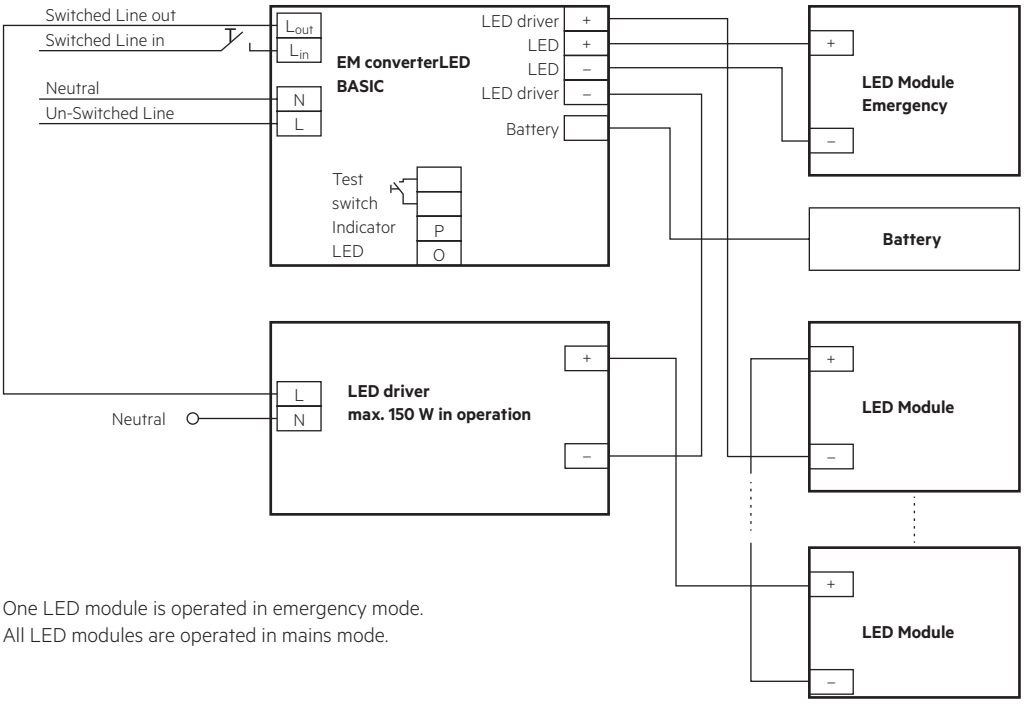

One LED module is operated in emergency mode.
All LED modules are operated in mains mode.

EM converterLED BASIC with a standard LED driver and parallel operation of LED modules

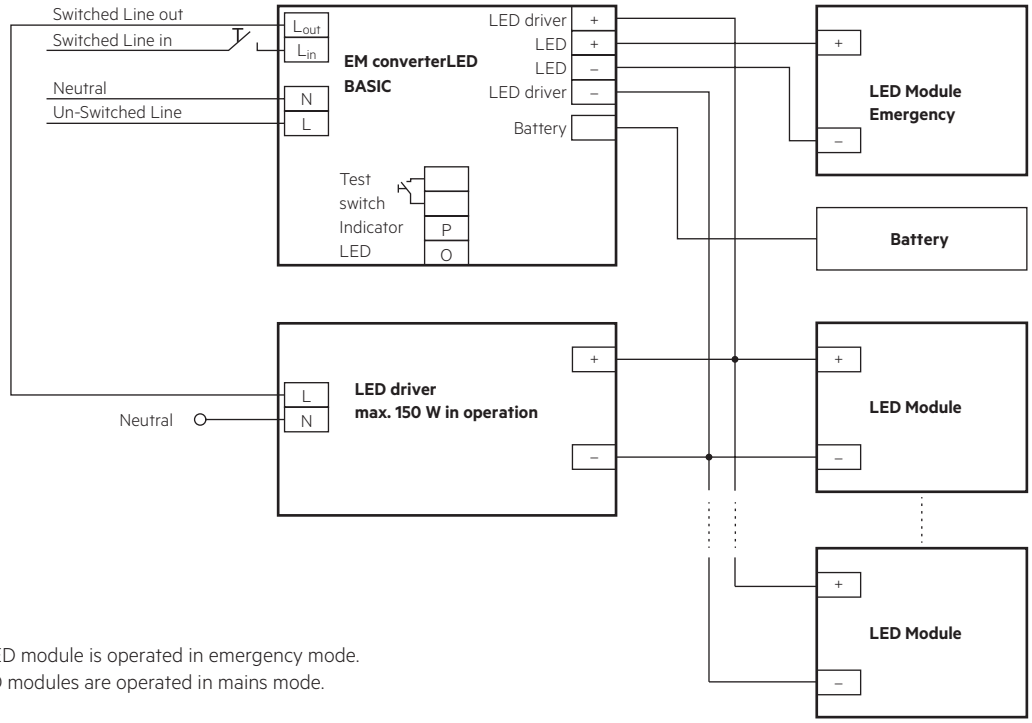

One LED module is operated in emergency mode.
All LED modules are operated in mains mode.

3.2 Wiring type and cross section

Solid wire with a cross section of 0.5 – 1.5 mm². Strip 8 – 9 mm of insulation from the cables to ensure perfect operation of terminals.

Wiring: LED module/LED driver/supply

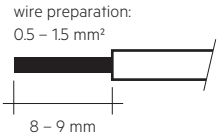

3.3 Battery connection

$LiFePO_4$: Direct connection

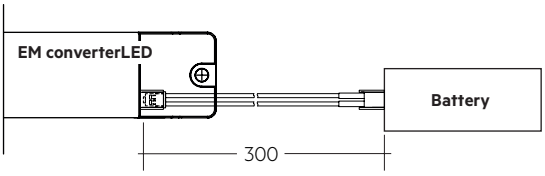

$LiFePO_4$: Connection with extension

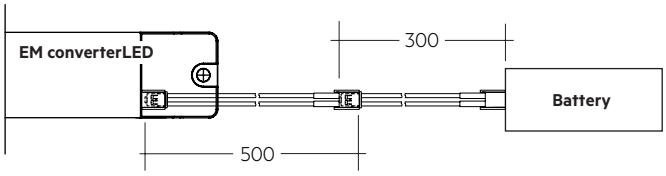

3.4 Loose wiring

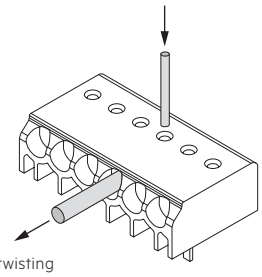

Loosen wire through twisting and pulling or using a Ø 1 mm release tool

3.5 Wiring guidelines

- The LED terminals, battery, indicator LED and test switch terminals are classified as SELV (output voltage < 60 V DC). Keep the wiring of the input terminals separated from the wiring of the SELV classified terminals or consider special wiring (double insulation, 6 mm creepage and clearance) when these connections should be kept SELV.
- The output to the LED is DC but has high frequency content, which should be considered for good EMC compliance.
- Separate LED leads from the mains and DALI connections and wiring for good EMC performance.
- Maximum lead length on the LED terminals is 3 m. For a good EMC performance keep the LED wiring as short as possible.
- Route the secondary wires (LED module) in parallel to ensure good EMC performance.
- Maximum lead length for the Test switch and Indicator LED connection is 1 m. Separate the test switch and Indicator LED wiring from the LED leads to prevent noise coupling.
- Battery leads are specified with 0.5 mm cross section and a length of 0.8 m
- Protect the wiring against short circuits to earth (sharp edged metal parts, metal cable clips, louver, etc.) to avoid the damage of the control gear.

To ensure that a luminaire containing LED emergency units complies with EN 55015 for radio frequency conducted interference in both normal and emergency mode it is essential to follow good practice in the wiring layout.

Within the luminaire route the switched and unswitched 50 Hz supply wiring as short as possible and keep it as far away as possible from the LED leads. Through wiring may affect the EMC performance of the luminaire.

Do not exceed the max. length of LED leads to the LED module. Note that the length of the EM converterLED leads to the LED module is added to the length of the leads from the LED driver to the EM converterLED module when considering the max. permitted lead length of the LED driver.

3.6 Maximum lead length

LED	3 m (6 m loop)[1]
Status indication LED	1 m
Batteries	0.8 m

[1] Note: The length of LED leads to the LED module must not be exceeded. Note that the length of the EM converterLED leads is added to the length of the leads from the LED driver to the EM converterLED module when considering max. permitted lead length of the LED driver. Leads should always be kept as short as possible.

3.7 Use of different phases

The use of different phases for switched line and unswitched line is allowed. When using different phases, the unswitched line must fail if the switched line fails. This is required to assure correct switching into emergency mode. It can be realised with a relay.

3.8 Compatibility with LLE FLEX modules

The EM converterLED can be used within certain restrictions to operate constant voltage LED loads from the Tridonic LLE FLEX (ADV, EXC) product range. A certain minimum length of the LLE FLEX is required for correct operation.
Detailed information in the download area of the ST and PRO product pages at www.tridonic.com (EM converterLED manual).

4. Mechanical values

4.1 Housing properties

- Casing manufactured from polycarbonate.
- Type of protection: IP20
- Max. torque at the mounting screws: 0.8 Nm

4.2 Mechanical data accessories

LED status indicator
- Green
- Mounting hole 6.5 mm diameter, 1 – 1.6 mm thickness
- Lead length 0.3 m / 0.6 m / 1.0 m
- Insulation rating: 90 °C
- Plug connection

Test switch
- Mounting hole 7.0 mm diameter
- Lead length 0.55 m
- Plug connection

Battery connection
- Plug connection 0.3 m
- Extension 0.5 m

5. Electrical values

5.1 Maximum loading of automatic circuit breakers

Automatic circuit breaker type	B10	B13	B16	B20	C10	C13	C16	C20	Inrush current	
Installation Ø	1.5 mm²	1.5 mm²	1.5 mm²	2.5 mm²	1.5 mm²	1.5 mm²	1.5 mm²	2.5 mm²	I_{max}	time
EMcLED BASIC 232A SR LiFePO4 50V KIT	90	130	130	130	180	260	260	260	10 A	120 µs

5.2 Insulation matrix

	Mains	Switched Live	Battery, LED, Test switch, Indicator LED	LED driver
Mains	–	•	• •	• •
Switched Live	•	–	• •	• •
Battery, LED, Test switch, Indicator LED	• •	• •	–	•
LED driver	• •	• •	–	–

• Represents basic insulation

• • Represents double or reinforced insulation

When using a non-SELV LED driver insulate the battery, LED, test switch and indicator LED in the luminaire according to the U-OUT rating of the LED driver.

5.3 Typ. LED current/voltage characteristics

The LED current in emergency mode is automatically adjusted by the EM converterLED module based on the total forward voltage of the LED modules connected and the associated battery. The start of the LED in emergency mode does not result in a current peak.

EMcLED BASIC 232A SR LiFePO4 50V KIT
Article number: 89801382
$LiFePO_4$ battery, 3.2 V battery voltage
880 – 950 mA battery discharge current (tolerance)

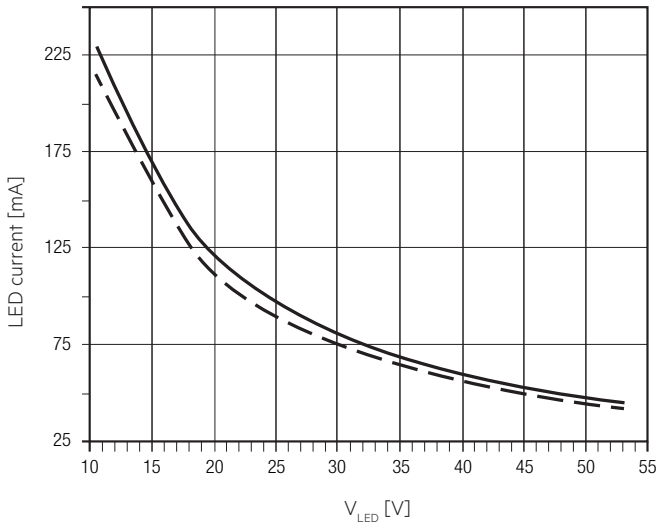

LED current at nominal battery voltage and min. battery discharge current

LED current at nominal battery voltage and max. battery discharge current

5.4 LED driver compatibility

The EM converterLED emergency unit use 3 pole technology and is compatible with most LED drivers on the market, however it is important to check that the rating of the LED driver does not exceed the values specified below:

- The max. allowed output current rating of the associated LED driver is 2 A eff (current rating of the terminals of EM converterLED) and 2.4 A peak (current rating of switching relays of EM converterLED)
- The max. allowed inrush current rating of the associated LED driver is 60 A peak for 1 ms or 84 A for 255 µs (inrush current rating of switching relay of EM converterLED)
- The max. allowed output voltage (U-OUT) of the associated LED driver applied to the EM converterLED output is 450 V (voltage withstand between adjacent contact of the single switching relay of the EM converterLED)
- The max. allowed LED load of the associated LED driver is 150 W in operation. The load must be an LED module.

Check compatibility with short function tests (duration of several seconds).

6. Functions

6.1 Status indication LED

System status is indicated by a green LED.

Note:
The status indication LED switches off if the battery does not reach the full capacity (3.6V battery voltage) within 20 – 24 hours.
If this occurs disconnect the mains voltage and operate the device in emergency mode for approximately one hour. Afterwards apply the mains voltage again and recharge the battery for 24 hours.
If the failure occurs again replace the battery.

7. Battery data

7.1 Battery selection

EMcLED BASIC, 3 h

				Type	**EMcLED BASIC 232A SR LiFePO4 50V KIT**
				Article no.	**89801382**
				Duration	**3 h**
Technology and capacity	Design	Number of cells	**Type**	**Article no.**	**Assignable batteries**
$LiFePO_4$ 1.5 Ah 18650 cells	Remote Box	1 x 3	**PACK-LiFePO4 4.5Ah 3 CON**	**28005855**	•

7.2 Battery charge / discharge data

EMcLED BASIC, 3 h

	Type	**EMcLED BASIC 232A SR LiFePO4 50V KIT**
	Article no.	**89801382**
	Duration	**3 h**
Battery charge time	Initial charge	24 h
	Fast recharge	24 h
	Trickle charge	continuously and battery voltage controlled
Charging current	Initial charge	250 – 290 mA
	Fast recharge	250 – 290 mA
	Trickle charge[1]	250 – 290 mA / 0 mA
Discharge current		880 – 950 mA
Charge voltage range[2]		2.0 – 3.65 V
Discharge voltage range		3.65 – 2.60 V

[1] Automatic recharge when battery voltage falls below 3.4 V. Charger off (0 mA) when battery voltage exceeds 3.6 V.

Note: Battery protected against operation at excessive temperatures (charging stopped when battery cell temperature < 0 °C or > 60 °C).

The emergency lighting LED driver will recharge the battery normally after running the test of 61347-2-7 CL 22.3 (abnormal operating conditions).

[2] The battery will not be charged below 2.0 V.

7.3 Accu-LiFePO4

Capacity 1.5 Ah

International designation	lFpR 19/66
Battery voltage/cell	3.2 V
Cell type	18650
Case temperature range to ensure	
4 years design life	+5 °C to +45 °C
6 years design life	+5 °C to +35 °C
8 years design life	+5 °C to +25 °C
Max. short term battery case temperature	
(shorter than 1 month over the battery lifetime)	70 °C
Max. number discharge cycles	50 cycles total
Max. storage time	15 months
	at -20 °C to +35 °C

Only use Tridonic batteries.

Comply with UN 38.3 and IEC 62133 (safety testing) protected against over charge, over discharge, charging at excessive temperatures, short-circuit and over current.

7.4 Safety (LiFeGuard)

Note: LiFeGuard ensures safe and reliable battery operation by offering a comprehensive three-layered safety system.
It addresses the cell, battery pack and emergency driver.

7.4.1 Deep discharge protection

When the battery remains connected without charging for a long period of time after the battery cut off of the driver the battery voltage can still drop. To make sure the cells are not damaged by this voltage drop, the battery protection prevents the battery from further discharge below 2.0 V.

7.4.2 Overcharge protection

If in case of an error or the use of a wrong driver the battery gets overcharged the battery protection will disconnect the battery from the driver at a voltage of 3.9 V. A discharge of the battery is still possible after the protection circuit was triggered to guarantee emergency operation.

7.4.3 Short-circuit protection

In case of a short circuit the battery protection opens the connection to the driver and the output is therefore free of voltage. The output will be reactivated again when the short circuit is removed.

7.4.4 Overtemperature protection

The battery is protected against temporary thermal overheating. If the temperature limit is exceeded the further charging of the battery is no longer possible. The temperature protection is activated below approx. 0 °C and above approx. +60 °C. The discharging of the battery is still possible to guarantee emergency operation. The charging is automatically activated when the temperature is within the range of 0 to 60°C again.

Battery has built in thermal sensor for safe charging. Mount battery away from heat source.
Positioning of the thermal sensor see battery data sheet.

7.5 Wiring batteries

To inhibit inverter operation disconnect the batteries by removing the connection at battery side.

For further informations refer to corresponding battery datasheet.

7.6 Storage, installation and commissioning

Relevant information about storage conditions, installation and commissioning are provided in the battery datasheets.

8. Miscellaneous

8.1 Maximum number of switching cycles

EM converterLEDs are tested with 50,000 mains switching cycles of the associated LED driver.

8.2 Battery replacement

After a battery replacement and a subsequent full charge cycle (24 h) a duration test is mandatory to prove that with the new battery the rated duration is achieved.

8.3 Mains-connected transformers

The EM converterLED does not contain mains-connected windings of transformers.

8.4 Additional information

Additional technical information at www.tridonic.com → Technical Data

Lifetime declarations are informative and represent no warranty claim.
No warranty if device was opened.