TRIDONIC

Driver LC 60W 24V o4a lp PRE

premium series 24 V – dimmable (IP20)

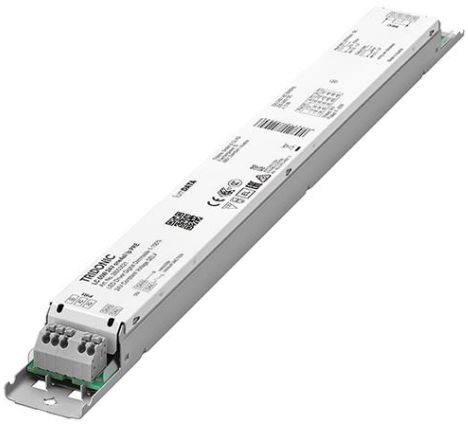

Product description

_ NEW: lumDATA (Luminaire data, Energy reporting and Diagnostics & Maintenance)
_ Dimmable 24 V constant voltage LED driver for flexible constant voltage strips
_ one4all interface enables different dimming options
_ Dimming range 1 to 100 %
_ No additional external dimmer is needed
_ Suitable for emergency escape lighting systems acc. to EN 50172
_ Nominal lifetime up to 50,000 h
_ 5 years guarantee (conditions at https://www.tridonic.com/en/int/services/manufacturer-guarantee-conditions)

Typical applications

_ Cove lighting, facade accent lighting, ceiling integration

Technical details

_ 24 V, 60 W
_ Small cross section
_ Push terminals for simple wiring
_ Output terminals (+/–) equipped twice for more flexibility in the application

Interfaces

_ one4all (DALI, DSI, switchDIM, corridorFUNCTION)
_ Terminal blocks: 45° push terminals

System solution

_ Tridonic LLE-FLEX ADV 600, 1,200, 1,800 lm/m
_ Tridonic LLE-FLEX EXC 600, 1,200, 1,800, 2,500 lm/m
_ In connection with Flex accessories wire to PCB plug
_ Test the function of third party light sources before use at low dimming levels to ensure the dimming function works perfectly

Website

http://www.tridonic.com/28003521



Linear | High bay | **Decorative** | Downlights | Spotlights | Free-standing | Area | Floor | Wall | Street

Driver LC 60W 24V o4a lp PRE

premium series 24 V – dimmable (IP20)

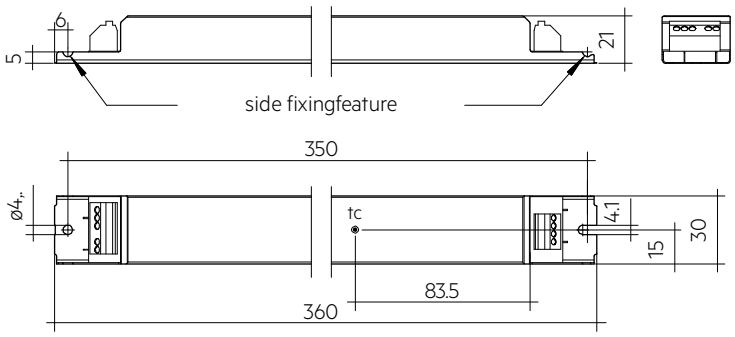

Ordering data

Type	Article number	Packaging, carton	Packaging, pallet	Weight per pc.
LC 60W 24V one4all lp PRE	**28003521**	10 pc(s).	480 pc(s).	0.246 kg

Technical data

Rated supply voltage	220 – 240 V
AC voltage range	198 – 264 V
DC voltage range	176 – 280 V
Mains frequency	0 / 50 / 60 Hz
Overvoltage protection	320 V AC, 48 h
Typ. rated current (at 230 V, 50 Hz, full load) ①	330 mA
Typ. current (220 V, 0 Hz, full load, 15 % dimming level)	70 mA
Leakage current (at 230 V, 50 Hz, full load) ①	< 500 µA
Max. input power	68 W
Typ. efficiency (at 230 V, 50 Hz, full load)	89 %
λ (at 230 V, 50 Hz, full load) ①	0.98
Typ. power consumption on stand-by	< 0.5 W
Typ. input current in no-load operation	< 31 mA
Typ. input power in no-load operation	< 2.5 W
In-rush current (peak / duration)	27.6 A / 251 µs
THD (at 230 V, 50 Hz, full load) ①	< 8 %
Output P_ST_LM (at full load)	≤ 1
Output SVM (at full load)	≤ 0.4
Starting time (at 230 V, 50 Hz, full load) ①	< 0.65 s
Starting time (DC mode)	< 0.32 s
Switchover time (AC/DC)	< 0.32 s
Turn off time (at 230 V, 50 Hz, full load)	< 0.05 s
Output voltage tolerance	± 1 V
Output LF voltage ripple (< 120 Hz)	± 5 %
Max. output voltage (U_out)	60 V
PWM frequency	~ 1 kHz
Dimming range	1 – 100 %
Mains surge capability (between L - N)	1 kV
Mains surge capability (between L/N - PE)	2 kV
Type of protection	IP20
Lifetime	up to 50,000 h
Guarantee (conditions at www.tridonic.com)	5 Year(s)
Dimensions L x W x H	360 x 30 x 21 mm

Approval marks

lumDATA IP20 SELV RoHS

Standards

EN 55015, EN 61000-3-2, EN 61000-3-3, EN 61347-1, EN 61347-2-13, EN 62384, EN 61547, According to EN 62386-101/102/103, according to EN 50172, according to EN 60598-2-22

Specific technical data

Type	Load	Output voltage	Output current	Max. output power (at full load)	Typ. power consumption (at full load)	Typ. current consumption	tc point max.	Ambient temperature ta
LC 60W 24V one4all lp PRE	10 %	24 V	250 mA	6 W	8.6 W	52 mA	75 °C	-25 … +70 °C
LC 60W 24V one4all lp PRE	15 %	24 V	375 mA	9 W	11.8 W	66 mA	75 °C	-25 … +70 °C
LC 60W 24V one4all lp PRE	20 %	24 V	500 mA	12 W	14.9 W	75 mA	75 °C	-25 … +70 °C
LC 60W 24V one4all lp PRE	30 %	24 V	750 mA	18 W	21.3 W	100 mA	80 °C	-25 … +70 °C
LC 60W 24V one4all lp PRE	40 %	24 V	1,000 mA	24 W	27.6 W	126 mA	80 °C	-25 … +70 °C
LC 60W 24V one4all lp PRE	50 %	24 V	1,250 mA	30 W	34.1 W	154 mA	80 °C	-25 … +70 °C
LC 60W 24V one4all lp PRE	60 %	24 V	1,500 mA	36 W	40.6 W	181 mA	80 °C	-25 … +70 °C
LC 60W 24V one4all lp PRE	70 %	24 V	1,750 mA	42 W	47.1 W	209 mA	80 °C	-25 … +65 °C
LC 60W 24V one4all lp PRE	80 %	24 V	2,000 mA	48 W	53.7 W	238 mA	80 °C	-25 … +65 °C
LC 60W 24V one4all lp PRE	90 %	24 V	2,250 mA	54 W	60.2 W	266 mA	80 °C	-25 … +65 °C
LC 60W 24V one4all lp PRE	100 %	24 V	2,500 mA	60 W	66.9 W	295 mA	80 °C	-25 … +60 °C

① Valid at 100 % dimming level.

1. Standards

EN 55015
EN 61000-3-2
EN 61000-3-3
EN 61347-1
EN 61347-2-13
EN 62384
EN 61547
According to EN 62386-101/102/103
According to EN 50172 for use in central battery systems
According to EN 60598-2-22 suitable for emergency lighting installations

2. Thermal details and lifetime

2.1 Expected lifetime

Expected lifetime

Type	Output load	ta	40 °C	45 °C	50 °C	55 °C	60 °C	65 °C	70 °C
LC 60W 24V one4all lp PRE	> 6 – 12 W	tc	45 °C	50 °C	55 °C	60 °C	65 °C	70 °C	75 °C
		Lifetime	>100,000 h	>100,000 h	>100,000 h	>100,000 h	>100,000 h	100,000 h	70,000 h
	> 12 – 36 W	tc	50 °C	55 °C	60 °C	65 °C	70 °C	75 °C	80 °C
		Lifetime	>100,000 h	>100,000 h	>100,000 h	>100,000 h	>100,000 h	70,000 h	50,000 h
	> 36 – 54 W	tc	55 °C	60 °C	65 °C	70 °C	75 °C	80 °C	–
		Lifetime	>100,000 h	>100,000 h	>100,000 h	>100,000 h	70,000 h	50,000 h	–
	> 54 – 60 W	tc	60 °C	65 °C	70 °C	75 °C	80 °C	–	–
		Lifetime	>100,000 h	>100,000 h	>100,000 h	70,000 h	50,000 h	–	–

The LED control gear is designed for a lifetime stated above under reference conditions and with a failure probability of less than 10 %.

The relation of tc to ta temperature depends also on the luminaire design.
If the measured tc temperature is approx. 5 K below tc max., ta temperature should be checked and eventually critical components (e.g. ELCAP) measured. Detailed information on request.

3. Installation / wiring

3.1 Circuit diagram

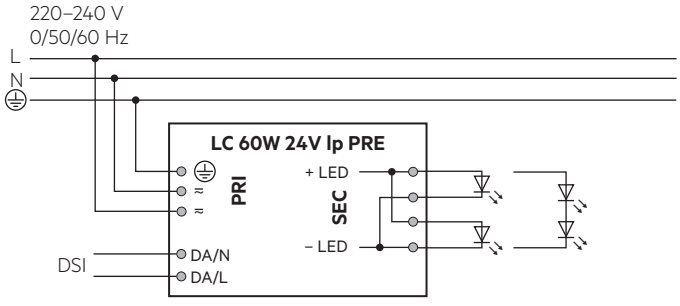

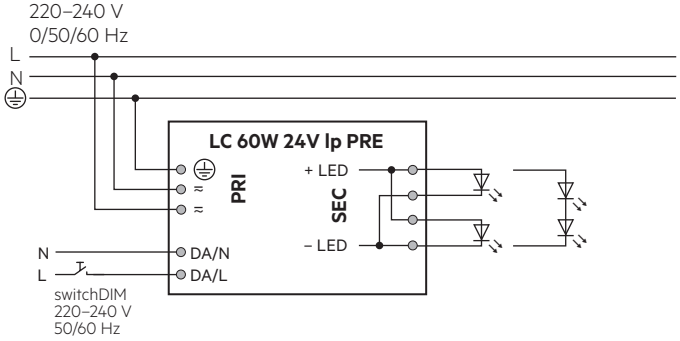

3.2 Wiring type and cross section

Mains supply wires
For wiring use stranded wire with ferrules or solid wire from 0.2 – 1.5 mm².
For perfect function of the push-wire terminals (WAGO 250) the strip length should be 8.5 – 9.5 mm.
Use one wire for each terminal connector only.

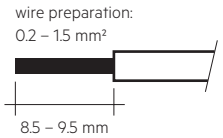

Secondary wires (LED module)
For wiring use stranded wire with ferrules or solid wire from 0.2 – 1.5 mm² (24AWG – 16AWG).
For perfect function of the push-wire terminals (Phoenix SPTAF 1/4-5,0-IL) the strip length should be 8 mm.
Use one wire for each terminal connector only.

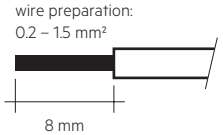

3.3 Loose wiring

Mains supply wires

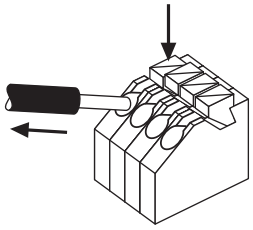

Release of the wiring
Press down the “push button” and remove the cable from front.

Secondary wires (LED module)

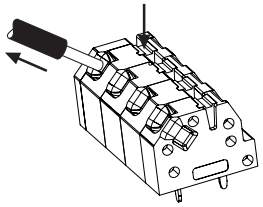

3.4 Wiring guidelines

- The cables should be run separately from the mains connections and mains cables to ensure good EMC conditions.
- The LED wiring should be kept as short as possible to ensure good EMC. The max. secondary cable length is 2 m (4 m circuit).
- Secondary switching is not permitted.
- The LED driver has no inverse-polarity protection on the secondary side. Wrong polarity can damage LED modules with no inverse-polarity protection.
- Wrong wiring of the LED driver can lead to malfunction or irreparable damage.
- To avoid the damage of the Driver, the wiring must be protected against short circuits to earth (sharp edged metal parts, metal cable clips, louver, etc.).

3.5 Hot plug-in

Hot plug-in is not supported due to residual output voltage of > 0 V.
When connecting an LED load, restart the device to activate the LED output. This can be done via mains reset or via interface (DSI, switchDIM).

3.6 Earth connection

The earth connection is conducted as protection earth (PE). The LED driver can be earthed via earth terminal. If the LED driver will be earthed, protection earth (PE) has to be used. There is no earth connection required for the functionality of the LED driver. Earth connection is recommended to improve following
behaviour:

- Electromagnetic interferences (EMI)
- LED glowing at standby
- Transmission of mains transients to the LED output

In general it is recommended to earth the LED driver if the LED module is mounted on earthed luminaire parts respectively heat sinks and thereby representing a high capacity against earth.

3.7 Insulation between terminals

Insulation	Mains	PE	LED	DALI
Mains	–	basic	double	basic
PE	basic	–	basic	basic
LED	double	basic	–	double
DALI	basic	basic	double	–

basic ... represents basic insulation.
double ... represents double or reinforced insulation.

4. Electrical values

4.1 Efficiency vs. load

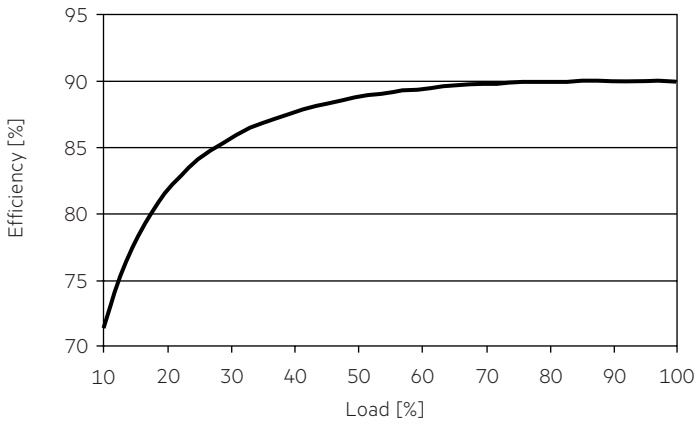

4.2 Power factor vs. Load

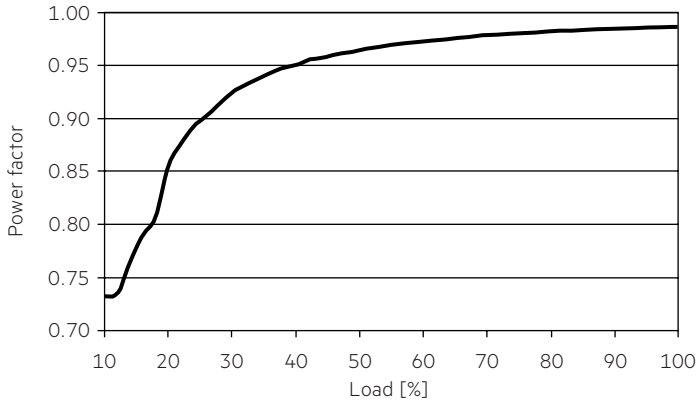

4.3 Input power vs. Load

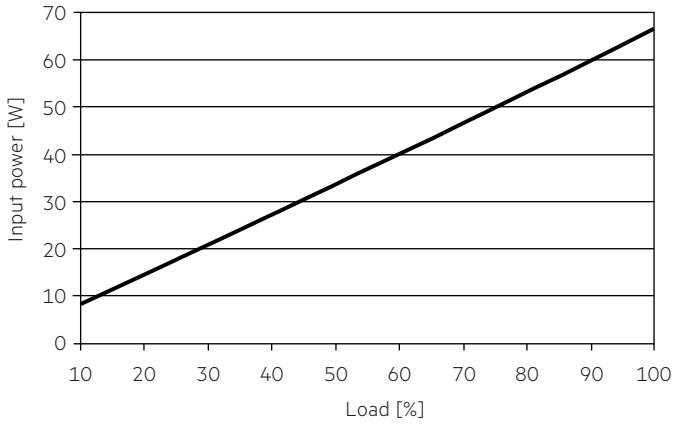

4.4 Input current vs. Load

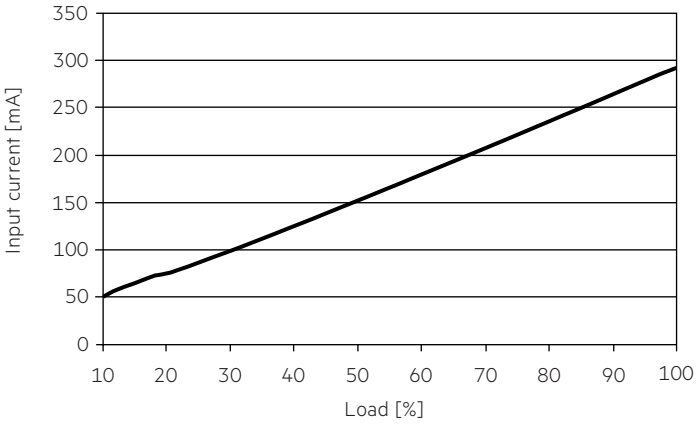

4.5 THD vs. Load

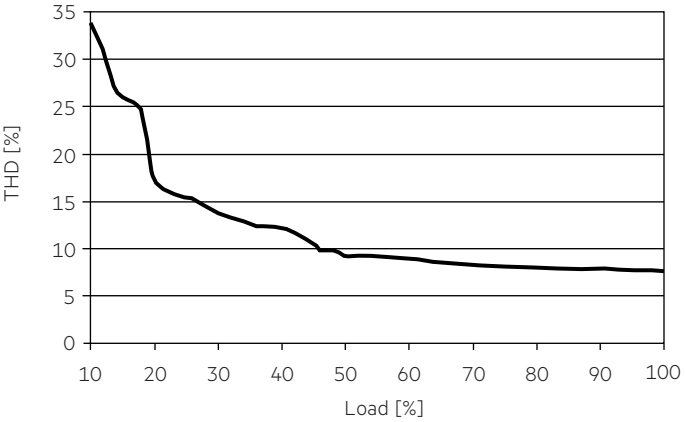

4.6 Maximum loading of automatic circuit breakers in relation to inrush current

Automatic circuit breaker type	C10	C13	C16	C20	B10	B13	B16	B20	Inrush current	
Installation Ø	1.5 mm²	1.5 mm²	2.5 mm²	2.5 mm²	1.5 mm²	1.5 mm²	2.5 mm²	2.5 mm²	I_{max}	time
LC 60W 24V one4all lp PRE	15	20	25	31	9	12	15	19	27.6 A	251 µs

These are max. values calculated out of inrush current! Please consider not to exceed the maximum rated continuous current of the circuit breaker.
Calculation uses typical values from ABB series S200 as a reference.
Actual values may differ due to used circuit breaker types and installation environment.

4.7 Harmonic distortion in the mains supply (at 230 V / 50 Hz and full load) in %

	THD	3.	5.	7.	9.	11.
LC 60W 24V one4all lp PRE	8	8	5	3	3	3

4.8 Dimming

Dimming range 1 % to 100 %
Digital control with:
- DSI signal: 8 bit Manchester Code
  Speed 1 % to 100 % in 1.4 s

Dimming is realized by PWM dimming.

4.9 Dimming characteristics

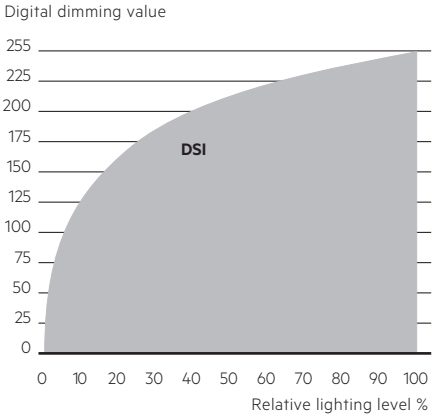

Dimming characteristics as seen by the human eye

5. Interfaces / communication

5.1 Control input (DA/N, DA/L)

Digital signal or switchDIM can be wired on the same terminals (DA/N and DA/L).

The control input is non-polar for digital control signals (DSI).
The control signal is not SELV. Control cable has to be installed in accordance to the requirements of low voltage installations.
Different functions depending on each module.

5.2 switchDIM

Integrated switchDIM function allows a direct connection of a pushbutton for dimming and switching.
Brief push (< 0.6 s) switches LED control gear ON and OFF. The dimm level is saved at power-down and restored at power-up.
When the pushbutton is held, LED modules are dimmed. After repush the LED modules are dimmed in the opposite direction.
In installations with LED control gears with different dimming levels or opposite dimming directions (e.g. after a system extension), all LED control gears can be synchronized to 50 % dimming level by a 10 s push.
Use of pushbutton with indicator lamp is not permitted.

5.3 Light level in DC operation

The LED driver is designed for operation on DC voltage and pulsed DC voltage.

Light output level in DC operation: programmable 1 – 100 % (EOFu = 0.13).
Programming by digital signal.
In DC operation dimming mode can be activated.

The voltage-dependent input current of Driver incl. LED module is depending on the used load.

The voltage-dependent no-load current of Driver (without or defect LED module) is for:
AC: < 31 mA
DC: < 15 mA

6. Functions

6.1 Short-circuit behaviour

In case of a short-circuit at the LED output the LED output is switched off.
After restart of the LED driver the output will be activated again. The restart can either be done via mains reset or via interface (DSI, switchDIM).
Open circuit lamp failure is not recognized.

6.2 Overload protection

If the maximum load is exceeded by a defined internal limit, the LED driver turns off the LED output. After restart of the LED driver the output will be activated again.
The restart can either be done via mains reset or via interface (DSI, switchDIM).

6.3 Overtemperature protection

The LED driver is protected against temporary thermal overheating.
If the temperature limit is exceeded the output current of the LED module(s) is reduced. The temperature protection is activated above tc max.
The activation temperature differs depending on the LED load.
On DC operation this function is deactivated to fulfill emergency requirements.

6.4 corridorFUNCTION

The corridorFUNCTION can be programmed in two different ways.
To program the corridorFUNCTION by means of software a DALI-USB interface is needed in combination with a DALI PS. The software can be the masterCONFIGURATOR.
To activate the corridorFUNCTION without using software a voltage of 230 V has to be applied for five minutes at the switchDIM connection.
The unit will then switch automatically to the corridorFUNCTION.

Note:
If the corridorFUNCTION is wrongly activated in a switchDIM system (for example a switch is used instead of pushbutton), there is the option of installing a pushbutton and deactivating the corridorFUNCTION mode by five short pushes of the button within three seconds.

switchDIM and corridorFUNCTION are very simple tools for controlling gears with conventional pushbuttons or motion sensors.
To ensure correct operation a sinusoidal mains voltage with a frequency of 50 Hz or 60 Hz is required at the control input.
Special attention must be paid to achieving clear zero crossings. Serious mains faults may impair the operation of switchDIM and corridorFUNCTION.

6.5 Constant light output (CLO)

The luminous flux of an LED decreases constantly over the lifetime. The CLO function ensures that the emitted luminous flux remains stable. For that purpose the LED current will increase continuously over the LED lifetime.
In masterCONFIGURATOR it is possible to select a start value (in percent) and an expected lifetime. The LED driver adjusts the current afterwards automatically.

6.6 Power-up/-down fading

The power-up/-down function offers the opportunity to modify the on-/off behavior. The time for fading on or off can be adjusted in a range of 0.2 to 16 seconds. According to this value, the device dims either from 0 % up to the power-on level or from the current set dim level down to 0 %. This feature applies while operating via switchDIM and when switching the mains voltage on or off. By factory default no fading time is set (= 0 seconds).

6.7 Software / programming

With appropriate software and a interface different functions can be activated and various parameters can be configured in the LED driver.
To do so, a DALI-USB r and the software (masterCONFIGURATOR) are required.

6.8 masterCONFIGURATOR

From version 2.8:
For programming functions (CLO, power-up fading, corridorFUNCTION) and device settings (fade time, ePowerOnLevel, DC level, etc.).
For further information see masterCONFIGURATOR manual.

6.9 deviceCONFIGURATOR

PC (windows) based software application to transfer parameters into our drivers.
Workflow optimised for the use in OEM production line.
For further information see deviceCONFIGURATOR manual.

7. Miscellaneous

7.1 Insulation and electric strength testing of luminaires

Electronic devices can be damaged by high voltage. This has to be considered during the routine testing of the luminaires in production.

According to IEC 60598-1 Annex Q (informative only!) or ENEC 303-Annex A, each luminaire should be submitted to an insulation test with 500 V DC for 1 second. This test voltage should be connected between the interconnected phase and neutral terminals and the earth terminal.
The insulation resistance must be at least 2 MΩ.

As an alternative, IEC 60598-1 Annex Q describes a test of the electrical strength with 1500 V AC (or 1.414 x 1500 V DC). To avoid damage to the electronic devices this test must not be conducted.

7.2 Conditions of use and storage

Humidity:	5 % up to max. 85 %, not condensed (max. 56 days/year at 85 %)
Storage temperature:	-40 °C up to max. +80 °C

The devices have to be acclimatised to the specified temperature range (ta) before they can be operated.

The LED driver is declared as inbuilt LED controlgear, meaning it is intended to be used within a luminaire enclosure.
If the product is used outside a luminaire, the installation must provide suitable protection for people and environment (e.g. in illuminated ceilings).

7.3 Maximum number of switching cycles

All LED driver are tested with 50,000 switching cycles.
The actually achieved number of switching cycles is significantly higher.

7.4 Additional information

Additional technical information at www.tridonic.com → Technical Data

Lifetime declarations are informative and represent no warranty claim.
No warranty if device was opened.